Copyright

by

Matilde Noemí Lalín

2005

The Dissertation Committee for Matilde Noemí Lalín

certifies that this is the approved version of the following dissertation:

Some relations of Mahler measure with hyperbolic volumes and special values of L-functions

Committee:

Fernando Rodriguez-Villegas, Supervisor

John T. Tate

Jeffrey D. Vaaler

Jose F. Voloch

Christopher Deninger

Some relations of Mahler measure with hyperbolic volumes and special values of L-functions

by

Matilde Noemí Lalín, Lic.

Dissertation

Presented to the Faculty of the Graduate School of

The University of Texas at Austin

in Partial Fulfillment

of the Requirements

for the Degree of

Doctor of Philosophy

The University of Texas at Austin

August 2005

To Mamela, in loving memory.

To Papelo, far yet close.

To Pablo, my other half.

Acknowledgments

I am ∞-ly grateful to my supervisor Fernando Rodriguez-Villegas for the enormous amount of mathematics that he has taught me and for all of his encouragement and guidance not only in mathematics but also in mathematical life, American university life and many other aspects of life.

I am deeply thankful to John Tate, for his generosity and financial support. I would like to thank him, as well as Jeffrey Vaaler and Felipe Voloch for their encouragement and for the mathematics I learned from them through talks and courses during my stay at UT. I would like to thank Felipe Voloch for his useful comments that helped improve the exposition of this work. I wish to thank all of the people I have just mentioned and Christopher Deninger for serving in my committee.

I am very thankful to David Boyd for his encouragement and for keeping track of my projects and always having useful comments about them. I am also very thankful to Marie-Jose Bertin and Vincent Maillot for their kindness and for several helpful discussions.

I am grateful to the members of the Mathematics department, students, faculty, and staff, and the members of the Number Theory group in particular, for creating such a friendly atmosphere that has allowed me to learn in a very enjoyable setting.

I am thankful to the people who are involved in the Harrington Graduate

Fellows program for all the good moments shared and for the opportunity to meet very interesting people in areas other than Mathematics. I have enjoyed very much the freedom that this program has granted me.

I owe a great debt to all my friends that have supported, encouraged, and put up with me during all these years. Thanks to my friends from UT, and very special thanks to my officemates. Thanks to my friends from Princeton and from Boston who helped me so much during my times at those places and continued their support by e-mail. Thanks to my friends in Argentina, for their company through e-mail and for sharing so many special moments in spite of the distance. I would like to specially thank Ariel for his help during the application process and Mar and Alessandra for helping me during my first weeks in this country and before my arrival in Princeton.

I would also like to express my gratitude to my professors from Universidad de Buenos Aires. Very special thanks to the people from Olimpíada Matemática Argentina and the high school mathematics teachers who coached me during my time in Mathematical Olympiads. Those were inspirational years that would change the path of my life forever.

I would like to deeply express my gratitude to my father, and the Bianucci family for their constant support, enthusiasm, love, and friendship that have been crucial during all these years. I thank as well my mother who has been present with me all the time in my heart.

Finally, I owe everything to my husband Pablo. I have no words to express how thankful I am for so much love, support, devotion, company, friendship, and the general happiness of sharing every moment of "life, the universe, and everything".

Matilde Noemí Lalín

The University of Texas at Austin

August 2005

Some relations of Mahler measure with hyperbolic volumes and special values of L-functions

Publication No. _____

Matilde Noemí Lalín, Ph.D.
The University of Texas at Austin, 2005

Supervisor: Fernando Rodriguez-Villegas

We construct families of polynomials of up to five variables whose Mahler measures are given in terms of multiple polylogarithms. The formulas are homogeneous and their weight coincides with the number of variables of the corresponding polynomial. Next, we fix the coefficients of these families and find some n-variable polynomial families whose Mahler measure is expressed in terms of polylogarithms, zeta functions, and Dirichlet L-functions.

We also develop examples of formulas where the Mahler measure of certain polynomial may be interpreted as the volume of a hyperbolic object.

The examples involving polylogarithms, zeta functions and Dirichlet L-functions are expected to be related to computations of regulators in motivic cohomology as

observed by Deninger, and later Rodriguez-Villegas and Maillot. While Rodriguez-Villegas made this relationship explicit for the two variable case, we have described in detail the three variable case and we expect to extend our ideas to several variables.

Contents

Acknowledgments **v**

Abstract **vii**

Chapter 1 Introduction **1**

Chapter 2 Polylogarithms **5**

Chapter 3 Generating examples in several variables **9**

3.1 Examples with multiple polylogarithms 9

3.1.1 The main idea 10

3.1.2 The results 13

3.2 Examples of n-variable families 16

3.2.1 An important integral 18

3.2.2 An identity for symmetric polynomials 22

3.2.3 Description of the general method 23

3.2.4 The results 30

Chapter 4 Connections with hyperbolic volumes **37**

4.1 Introduction 37

4.2 A family of examples 38

4.2.1 A preliminary formula 40

4.2.2 The main result 44
4.2.3 Some particular cases 50
4.2.4 Analogies with the case of A-polynomials 55

Chapter 5 An algebraic integration for Mahler measure 63

5.1 The two-variable case 63
5.1.1 The case when η is exact 66
5.1.2 An example for the two-variable case 66
5.2 The three-variable case 67
5.3 The K-theoretic point of view 72
5.3.1 Introduction to K-theory 72
5.3.2 The polylogarithm complexes 74
5.4 Examples 77
5.4.1 Smyth's example 78
5.4.2 Another example by Smyth 80
5.4.3 An example from section 3.1.2 85
5.4.4 Another example from section 3.1.2 87
5.4.5 The case of $\mathrm{Res}_{\{0,m,m+n\}}$ 93
5.4.6 Condon's example 98
5.5 A few words about the four-variable case 110
5.6 Examples 113
5.6.1 $\mathrm{Res}_{\{(0,0),(1,0),(0,1)\}}$ 113
5.6.2 An example from section 3.2 121
5.7 A brief introduction to the language and ideas of Beilinson's conjectures 126
5.7.1 Deligne cohomology 127
5.7.2 Motivic Cohomology 129
5.7.3 Conjectures 129
5.7.4 The non-exact case 132

5.8 The n-variable case 133
5.8.1 Zagier's conjecture and Bloch groups 134
5.8.2 The polylogarithmic motivic complexes 136
5.8.3 The exact case 142

Chapter 6 Conclusion **144**

Bibliography **145**

Vita **151**

Chapter 1

Introduction

The (logarithmic) Mahler measure of a non-zero polynomial $P \in \mathbb{C}[x_1^{\pm 1}, \dots x_n^{\pm 1}]$ is defined as

$$m(P) = \frac{1}{(2\pi \mathrm{i})^n} \int_{\mathbb{T}^n} \log |P(x_1, \dots, x_n)| \frac{\mathrm{d}x_1}{x_1} \dots \frac{\mathrm{d}x_n}{x_n}.$$

Here $\mathbb{T}^n = \{(z_1, \dots, z_n) \in \mathbb{C}^n \ |z_1| = \dots = |z_n| = 1\}$ is the unit torus. This integral is not singular and $m(P)$ always exists. Moreover, if P has integral coefficients, this number is nonnegative.

It is easy to see that $m(P \cdot Q) = m(P) + m(Q)$. This simple equality leads to the definition of the Mahler measure of a rational function as the difference of the Mahler measures of its numerator and its denominator.

For one-variable polynomials, Jensen's formula leads to

$$m(P) = \log |a_d| + \sum_{n=1}^{d} \log^+ |\alpha_n| \quad \text{for} \quad P(x) = a_d \prod_{n=1}^{d} (x - \alpha_n).$$

Here $\log^+ x = \log x$ is $x \geq 1$ and 0 otherwise.

One obtains, thus, a simple expression for the Mahler measure as a function of the roots of the polynomial.

The Mahler measure of one-variable polynomials was studied by Lehmer [33]

in the 30's as part of a technique to find large prime numbers. Mahler [34] introduced the generalization to several variables in the 60's.

Mahler measure is related to heights. Indeed, if α is an algebraic number, and P_α is its minimal polynomial over $\mathbb{Q}$, then

$$m(P_\alpha) = [\mathbb{Q}(\alpha) : \mathbb{Q}]\, h(\alpha)$$

where h is the logarithmic Weil height. This identity also extends to several variable polynomials and heights in hypersurfaces.

Kronecker's Lemma characterizes the polynomials with integral coefficients whose Mahler measure is zero. They are products of monomials and cyclotomic polynomials evaluated in monomials. The most famous problem in this direction is what is known as Lehmer's question: is there a lower bound for the Mahler measure of polynomials with integer coefficients and positive Mahler measure?

It is in general a very hard problem to give an explicit closed formula for the Mahler measure of a polynomial in two or more variables. The simplest examples in more than one variable were computed by Smyth [7, 42]:

$$m(1 + x + y) = \frac{3\sqrt{3}}{4\pi}\mathrm{L}(\chi_{-3}, 2) = \mathrm{L}'(\chi_{-3}, -1). \tag{1.1}$$

Here $\mathrm{L}(\chi_{-3}, s)$ is the Dirichlet L-function associated to the quadratic character χ_{-3} of conductor 3, and

$$m(1 + x + y + z) = \frac{7}{2\pi^2}\zeta(3). \tag{1.2}$$

Where ζ is the Riemann zeta function.

Apart from the above examples, for up to three variables, several examples have been produced by Bertin [2–5], Boyd [7–9], Boyd and Rodriguez-Villegas [11, 12], Condon [14], Rodriguez-Villegas [40], Smyth [42, 43] and others.

Smyth [44] gave an example of an n-variable family of polynomials whose

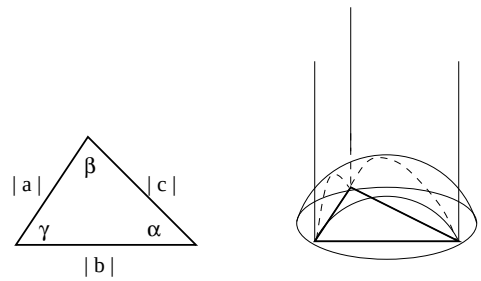

Figure 1.1: Ideal hyperbolic tetrahedron constructed over triangle with sides of length $|a|$, $|b|$ and $|c|$.

Mahler measures can be expressed in terms of hypergeometric series.

We will discuss the question of how to generate new examples in several variables (including arbitrary number of variables) in Chapter 3.

Mahler measure also relates to hyperbolic volumes. A generalization of Smyth's first result is due to Cassaigne and Maillot [35]: for $a, b, c \in \mathbb{C}^*$,

$$\pi m(a + bx + cy) = \begin{cases} D\left(\left|\frac{a}{b}\right| \mathrm{e}^{\mathrm{i}\gamma}\right) + \alpha \log|a| + \beta \log|b| + \gamma \log|c| & \triangle \\ \\ \pi \log \max\{|a|, |b|, |c|\} & \text{not } \triangle \end{cases} \tag{1.3}$$

where $\triangle$ stands for the statement that $|a|$, $|b|$, and $|c|$ are the lengths of the sides of a triangle, and α, β, and γ are the angles opposite to the sides of lengths $|a|$, $|b|$, and $|c|$ respectively.

D is the Bloch – Wigner dilogarithm (see Chapter 2, or [51]). The term with the dilogarithm may be interpreted as the volume of the ideal hyperbolic tetrahedron which has the triangle as basis and the fourth vertex is infinity. See figure 1.

We are going to explore further in this direction in Chapter 4.

The appearance of the L-functions in Mahler measures formulas is a common phenomenon. Deninger [19] interpreted the Mahler measure as a Deligne period of a mixed motive. More specifically, in two variables, and under certain conditions,

he proved that

$$m(P) = \mathrm{reg}(\xi_i),$$

where reg is the determinant of the regulator matrix, which is evaluated in some class in an appropriate group in K-theory.

Deninger explained the known relations of Mahler measure to L-series via Beilinson's conjectures for the two-variable case under certain restrictions. Later Maillot extended the results of Deninger for higher dimension.

This relation between Mahler measure and regulators was made explicit by Rodriguez-Villegas [40] for the two-variable case, explaining many of the formulas in two variables.

In Chapter 5, we extend Rodriguez-Villegas' work to three variables and explain how this could be generalized to more variables, provided that one accepts certain conjectures by Goncharov about the form of the regulator on polylogarithmic motivic complexes.

Chapter 2

Polylogarithms

The examples that we are going to produce and most of the examples that we are going to study involve zeta functions or Dirichlet L-series, but they all can be thought as special values of polylogarithms. In fact, this common feature will be the most appropriate way of dealing with the interpretation of these formulas in Chapter 5. Having said that, we proceed to recall some definitions and establish some common notation. We will follow the notation of Goncharov [23–25]:

Definition 1 *The multiple polylogarithms are defined as the power series*

$$\mathrm{Li}_{n_1,\ldots,n_m}(x_1,\ldots,x_m) := \sum_{0<k_1<k_2<\ldots<k_m} \frac{x_1^{k_1} x_2^{k_2} \ldots x_m^{k_m}}{k_1^{n_1} k_2^{n_2} \ldots k_m^{n_m}}$$

which are convergent for $|x_i| < 1$.

The weight of a multiple polylogarithm is the number $w = n_1 + \ldots + n_m$ and its length is the number m.

When $m = 1$ these functions are the classical polylogarithms. Note that

$$\mathrm{Li}_1(x) = -\log(1-x).$$

This formula motivates the name of polylogarithms.

Observe that the Riemann zeta function is obtained as a special value of polylogarithms: $\mathrm{Li}_k(1) = \zeta(k)$, and the same is true for some Dirichlet L-series, for instance, $\mathrm{L}(\chi_{-4}, k) = -\frac{\mathrm{i}}{2}(\mathrm{Li}_k(\mathrm{i}) - \mathrm{Li}_k(-\mathrm{i}))$.

Definition 2 *Hyperlogarithms are defined as the iterated integrals*

$$\mathrm{I}_{n_1,\ldots,n_m}(a_1 : \ldots : a_m : a_{m+1}) :=$$

$$\int_0^{a_{m+1}} \underbrace{\frac{\mathrm{d}t}{t-a_1} \circ \frac{\mathrm{d}t}{t} \circ \ldots \circ \frac{\mathrm{d}t}{t}}_{n_1} \circ \underbrace{\frac{\mathrm{d}t}{t-a_2} \circ \frac{\mathrm{d}t}{t} \circ \ldots \circ \frac{\mathrm{d}t}{t}}_{n_2} \circ \ldots \circ \underbrace{\frac{\mathrm{d}t}{t-a_m} \circ \frac{\mathrm{d}t}{t} \circ \ldots \circ \frac{\mathrm{d}t}{t}}_{n_m}$$

where n_i are integers, a_i are complex numbers, and

$$\int_0^{b_{k+1}} \frac{\mathrm{d}t}{t-b_1} \circ \ldots \circ \frac{\mathrm{d}t}{t-b_k} = \int_{0 \le t_1 \le \ldots \le t_k \le b_{k+1}} \frac{\mathrm{d}t_1}{t_1 - b_1} \cdots \frac{\mathrm{d}t_k}{t_k - b_k}.$$

The value of the integral above only depends on the homotopy class of the path connecting 0 and a_{m+1} on $\mathbb{C} \setminus \{a_1, \ldots, a_m\}$.

It is easy to see (for instance, in [21]) that

$$\mathrm{I}_{n_1,\ldots,n_m}(a_1 : \ldots : a_m : a_{m+1}) = (-1)^m \mathrm{Li}_{n_1,\ldots,n_m}\left(\frac{a_2}{a_1}, \frac{a_3}{a_2}, \ldots, \frac{a_m}{a_{m-1}}, \frac{a_{m+1}}{a_m}\right)$$

$$\mathrm{Li}_{n_1,\ldots,n_m}(x_1, \ldots, x_m) = (-1)^m \mathrm{I}_{n_1,\ldots,n_m}((x_1 \ldots x_m)^{-1} : \ldots : x_m^{-1} : 1).$$

which gives an analytic continuation to multiple polylogarithms. For instance, with the convention about integrating over a real segment, simple polylogarithms have an analytic continuation to $\mathbb{C} \setminus [1, \infty)$.

In order to extend polylogarithms (length 1) to the whole complex plane, several modifications have been proposed. Zagier [51] considers the following version:

$$\mathcal{L}_k(x) := \mathrm{Re}_k\left(\sum_{j=0}^{k}\frac{2^jB_j}{j!}(\log|x|)^j\mathrm{Li}_{k-j}(x)\right), \tag{2.1}$$

where B_j is the jth Bernoulli number, $\mathrm{Li}_0(x) \equiv -\frac{1}{2}$ and Re_k denotes Re or Im depending on whether k is odd or even.

This function is single-valued, real analytic in $\mathbb{P}^1(\mathbb{C}) \setminus \{0, 1, \infty\}$ and continuous in $\mathbb{P}^1(\mathbb{C})$. Moreover, $\mathcal{L}_k$ satisfies very clean functional equations. The simplest ones are

$$\mathcal{L}_k\left(\frac{1}{x}\right) = (-1)^{k-1}\mathcal{L}_k(x) \qquad \mathcal{L}_k(\bar{x}) = (-1)^{k-1}\mathcal{L}_k(x).$$

There are also lots of functional equations which depend on the index k. For instance, for $k = 2$, we get the Bloch Wigner dilogarithm,

$$D(x) = \mathrm{Im}(\mathrm{Li}_2(x) - \log|x|\mathrm{Li}_1(x)) = \mathrm{Im}(\mathrm{Li}_2(x)) + \log|x|\arg(1-x), \tag{2.2}$$

which satisfies the well-known five-term relation

$$D(x) + D(1-xy) + D(y) + D\left(\frac{1-y}{1-xy}\right) + D\left(\frac{1-x}{1-xy}\right) = 0. \tag{2.3}$$

It also satisfies

$$D(\bar{z}) = -D(z) \quad (\Rightarrow D|_{\mathbb{R}} \equiv 0\,) \tag{2.4}$$

$$-2\int_0^\theta \log|2\sin t|\,\mathrm{d}t = D(\mathrm{e}^{2\mathrm{i}\theta}) = \sum_{n=1}^{\infty}\frac{\sin(2n\theta)}{n^2}. \tag{2.5}$$

An account of the wonderful properties of $D(z)$ may be found in Zagier's work [49].

For $k = 3$ we obtain

$$\mathcal{L}_3(x) = \mathrm{Re}\left(\mathrm{Li}_3(x) - \log|x|\mathrm{Li}_2(x) + \frac{1}{3}\log^2|x|\mathrm{Li}_1(x)\right). \tag{2.6}$$

$\mathcal{L}_3$ satisfies more functional equations, such as the Spence – Kummer relation:

$$\mathcal{L}_3\left(\frac{x(1-y)^2}{y(1-x)^2}\right)+\mathcal{L}_3(xy)+\mathcal{L}_3\left(\frac{x}{y}\right)-2\mathcal{L}_3\left(\frac{x(1-y)}{y(1-x)}\right)-2\mathcal{L}_3\left(\frac{y(1-x)}{y-1}\right)-2\mathcal{L}_3\left(\frac{x(1-y)}{x-1}\right)$$

$$-2\mathcal{L}_3\left(\frac{1-y}{1-x}\right) - 2\mathcal{L}_3(x) - 2\mathcal{L}_3(y) + 2\mathcal{L}_3(1) = 0. \tag{2.7}$$

For future reference, we state the following simple property about differentiation of polylogarithms:

$$\mathrm{dLi}_k(x) = \begin{cases} \mathrm{Li}_{k-1}(x)\frac{\mathrm{d}x}{x} & k \geq 2 \\ \\ \frac{\mathrm{d}x}{1-x} & k = 1 \end{cases} \tag{2.8}$$

Chapter 3

Generating examples in several variables

3.1 Examples with multiple polylogarithms

In this section we are going to describe a method that in particular allows us to compute the Mahler measure of [1]

$$1+\alpha\left(\frac{1-x_1}{1+x_1}\right)\dots\left(\frac{1-x_n}{1+x_n}\right)z$$

in $\mathbb{C}(x_1,\dots,x_n,z)$ for $n=0,1,2,3$. We will refer to these as examples of the first kind.

We also consider

$$1+x+\alpha\left(\frac{1-x_1}{1+x_1}\right)\dots\left(\frac{1-x_n}{1+x_n}\right)(1+y)z$$

in $\mathbb{C}(x_1,\dots,x_n,x,y,z)$ for $n=0,1,2$ (examples of the second kind).

[1] In order to simplify notation we describe the polynomials as rational functions, writing $1+a\frac{1-x}{1+x}z$ instead of $1+x+a(1-x)z$, and so on. The Mahler measure does not change since the denominators are products of cyclotomic polynomials.

More details about this method can be found in [29].

3.1.1 The main idea

Let $P_\alpha \in \mathbb{C}[z_1, \ldots, z_n]$, a polynomial where the coefficients depend polynomially on a parameter $\alpha \in \mathbb{C}$. We replace α by $\alpha \frac{1-x}{1+x}$. A rational function $\tilde{P}_\alpha \in \mathbb{C}[z_1, \ldots, z_n](x)$ is obtained. The Mahler measure of the new function is a certain integral of the Mahler measure of the former polynomial. More precisely,

Proposition 3 *Let $P_\alpha \in \mathbb{C}[x_1, \ldots, x_n]$ as above, then,*

$$m(\tilde{P}_\alpha) = \frac{1}{2\pi \mathrm{i}} \int_{\mathbb{T}^1} m\left(P_{\alpha \frac{1-x}{1+x}}\right) \frac{\mathrm{d}x}{x}. \tag{3.1}$$

Moreover, if the Mahler measure of P_α depends only on $|\alpha|$, then

$$m(\tilde{P}_\alpha) = \frac{2}{\pi} \int_0^\infty m(P_t) \frac{|\alpha| \ \mathrm{d}t}{t^2 + |\alpha|^2}. \tag{3.2}$$

PROOF. Equality (3.1) is a direct consequence of the definition of Mahler measure. In order to prove equality (3.2), write $x = \mathrm{e}^{\mathrm{i}\theta}$. Observe that as long as x goes through the unit circle in the complex plane, $\frac{1-x}{1+x}$ goes through the imaginary axis $\mathrm{i}\mathbb{R}$, indeed, $\frac{1-x}{1+x} = -\mathrm{i} \tan\left(\frac{\theta}{2}\right)$. The integral becomes,

$$m(\tilde{P}_\alpha) = \frac{1}{2\pi} \int_0^{2\pi} m\left(P_{|\alpha \tan\left(\frac{\theta}{2}\right)|}\right) \ \mathrm{d}\theta = \frac{1}{\pi} \int_0^{\pi} m\left(P_{|\alpha| \tan\left(\frac{\theta}{2}\right)}\right) \ \mathrm{d}\theta.$$

Now make $t = |\alpha| \tan\left(\frac{\theta}{2}\right)$, then $\mathrm{d}\theta = \frac{2|\alpha| \ \mathrm{d}t}{t^2+|\alpha|^2}$,

$$m(\tilde{P}_\alpha) = \frac{2}{\pi} \int_0^\infty m\left(P_t\right) \frac{|\alpha| \ \mathrm{d}t}{t^2 + |\alpha|^2}.$$

□

Note that in the case of rational functions in both the first and second kind, their Mahler measures depend only on the absolute value of α. This is so, because the definition of Mahler measure allows the variable z to "absorb" any number of absolute value 1 that multiplies $a = |\alpha|$.

Summarizing, the idea is to integrate the Mahler measure of some polynomials in order to get the Mahler measure of more complex polynomials.

We will need the following:

Proposition 4 *Let P_a with $a > 0$ be a polynomial as before, (its Mahler measure depends only on $|\alpha|$) such that*

$$m(P_a) = \begin{cases} F(a) & \text{if } a \leq 1 \\ G(a) & \text{if } a > 1 \end{cases}$$

Then

$$m(\tilde{P}_a) = \frac{2}{\pi}\int_0^1 F(t)\frac{a\ \mathrm{d}t}{t^2+a^2} + \frac{2}{\pi}\int_0^1 G\left(\frac{1}{t}\right)\frac{a\ \mathrm{d}t}{a^2t^2+1}. \tag{3.3}$$

PROOF. The proof is the same as for equation (3.2) in Proposition 3, with an additional change of variables $x \to \frac{1}{x}$ in the integral on the right. $\square$

Now recall equation (3.2). If the Mahler measure of P_α is a linear combination of multiple polylogarithms, and if we write $\frac{|\alpha|}{x^2+|\alpha|^2} = \frac{\mathrm{i}}{2}\left(\frac{1}{x+\mathrm{i}|\alpha|} - \frac{1}{x-\mathrm{i}|\alpha|}\right)$, then it is likely that the Mahler measure of $\tilde{P}_\alpha$ will be also a linear combination of multiple polylogarithms.

Often we write polylogarithms evaluated in arguments of modulo greater than 1, meaning an analytic continuation given by the integral. Although the value of these multivalued functions may not be uniquely defined, we will always get linear combinations of these functions which are one-valued, since they represent Mahler measures of certain polynomials.

In order to express the results more clearly, we will establish some notation.

Definition 5 *Let*

$$G := \langle\, \sigma_1,\, \sigma_2,\, \tau \rangle \quad (\cong\, \mathbb{Z}/2\mathbb{Z} \oplus \mathbb{Z}/2\mathbb{Z} \oplus \mathbb{Z}/2\mathbb{Z})$$

an abelian group generated by the following actions in the set $(\mathbb{R}^*)^2$*:*

$$\sigma_1 : (a, b) \quad \mapsto \quad (-a, b)$$

$$\sigma_2 : (a, b) \quad \mapsto \quad (a, -b)$$

$$\tau : (a, b) \quad \mapsto \quad \left(\frac{1}{a}, \frac{1}{b}\right).$$

Also consider the following multiplicative character:

$$\chi : G \longrightarrow \{-1, 1\}$$

$$\chi(\sigma_1) = -1 \quad \chi(\sigma_2) = \chi(\tau) = 1.$$

Definition 6 *Given* $(a, b) \in \mathbb{R}^2$*,* $a \neq 0$*, define,*

$$\log(a, b) := \log |a|.$$

Definition 7 *Let* $a \in \mathbb{R}^*$*,* $x, y \in \mathbb{C}$*,*

$$\mathfrak{L}_r^a(x) \quad := \quad \mathrm{Li}_r(xa) - \mathrm{Li}_r(-xa)$$

$$\mathfrak{L}_{r:1}^a(x) \quad := \quad \log |a|(\mathrm{Li}_r(xa) - \mathrm{Li}_r(-xa))$$

$$\begin{aligned}
\mathfrak{L}^a_{r,s}(x,y) &:= \sum_{\sigma\in G}\chi(\sigma)\mathrm{Li}_{r,s}\left((x,y)\circ\left(a,\frac{1}{a}\right)^{\sigma}\right)\\
\mathfrak{L}^a_{r,s:1}(x,y) &:= \sum_{\sigma\in G}\chi(\sigma)\log\left(a,\frac{1}{a}\right)^{\sigma}\mathrm{Li}_{r,s}\left((x,y)\circ\left(a,\frac{1}{a}\right)^{\sigma}\right)
\end{aligned}$$

where

$$(x_1,y_1)\circ(x_2,y_2)=(x_1x_2,y_1y_2)$$

is the component-wise product.

Observation 8 *Let $a\in\mathbb{R}^*$, $x,y\in\mathbb{C}$, then,*

$$\mathfrak{L}^a_{r,s}(x,y)=\mathfrak{L}^a_{r,s}(x,-y)=-\mathfrak{L}^a_{r,s}(-x,y)$$

and analogously with $\mathfrak{L}^a_{r,s:1}$.

Observe also that the weight of any of the functions above is equal to the sum of its subindexes.

3.1.2 The results

We proved in [29] the following result.

Theorem 9 *For $a\in\mathbb{R}_{>0}$, starting with $P_\alpha=1+az$ and $m(1+az)=\log^+ a$, the following first-kind formulas are true:*

$$\pi m\left(1+a\left(\frac{1-x_1}{1+x_1}\right)z\right)=-\mathrm{i}\mathfrak{L}^a_2(\mathrm{i}), \tag{3.4}$$

$$\begin{aligned}
\pi^2 m\left(1+a\left(\frac{1-x_1}{1+x_1}\right)\left(\frac{1-x_2}{1+x_2}\right)z\right) &= 4\mathfrak{L}^a_3(1)-2\mathfrak{L}^a_{2:1}(1), && (3.5)\\
&= -\mathrm{i}\pi\mathfrak{L}^a_2(\mathrm{i})-\mathfrak{L}^a_{2,1}(1,\mathrm{i}), && (3.6)
\end{aligned}$$

$$\pi^3 m\left(1+a\left(\frac{1-x_1}{1+x_1}\right)\dots\left(\frac{1-x_3}{1+x_3}\right)z\right)$$
$$= 4\pi\mathfrak{L}_3^a(1) - 2\pi\mathfrak{L}_{2:1}^a(1) - 2\mathrm{i}(\mathfrak{L}_{2,2}^a(\mathrm{i},1) + \mathfrak{L}_{2,1:1}^a(\mathrm{i},1)). \tag{3.7}$$

Starting with equation

$$\pi^2 m(1+x+a(1+y)z) = \begin{cases} 2\mathfrak{L}_3^a(1) & \text{if } a \le 1 \\ \pi^2\log a + 2\mathfrak{L}_3^{a^{-1}}(1) & \text{if } a \ge 1 \end{cases} \tag{3.8}$$

(proved by Smyth [43]), the following second-kind formulas hold:

$$\pi^3 m\left(1+x+a\left(\frac{1-x_1}{1+x_1}\right)(1+y)z\right) = -\mathrm{i}\pi^2\mathfrak{L}_2^a(\mathrm{i}) + 2\mathrm{i}\mathfrak{L}_{3,1}^a(\mathrm{i},\mathrm{i}), \tag{3.9}$$

$$\pi^4 m\left(1+x+a\left(\frac{1-x_1}{1+x_1}\right)\left(\frac{1-x_2}{1+x_2}\right)(1+y)z\right)$$
$$= 4\pi^2\mathfrak{L}_3^a(1) - 2\pi^2\mathfrak{L}_{2:1}^a(1) + 4\left(\mathfrak{L}_{3,2}^a(1,1) + \mathfrak{L}_{3,1:1}^a(1,1)\right). \tag{3.10}$$

PROOF. Proving these results takes very technical -yet elementary- computations. We will show the proof of equation (3.9). The interested reader is referred to [29] for the proofs of the other formulas.

By Proposition 3 we have

$$m\left(1+x+a\left(\frac{1-x_1}{1+x_1}\right)(1+y)z\right) = \frac{2}{\pi}\int_0^\infty m(1+x+t(1+y)z)\frac{a\,\mathrm{d}t}{t^2+a^2}.$$

Applying Proposition 4 to formula (3.8),

$$= \frac{4}{\pi^3}\int_0^1 \mathfrak{L}_3^t(1)\,\frac{a}{t^2+a^2}\;\mathrm{d}t$$

$$+\frac{2}{\pi}\int_0^1 \log\left(\frac{1}{t}\right)\frac{a}{a^2t^2+1}\;\mathrm{d}t + \frac{4}{\pi^3}\int_0^1 \mathfrak{L}_3^t(1)\frac{a}{a^2t^2+1}\;\mathrm{d}t. \tag{3.11}$$

Let us first compute

$$\int_0^1 \mathfrak{L}_3^t(1)\left(\frac{a}{t^2+a^2}+\frac{a}{a^2t^2+1}\right)\,\mathrm{d}t \tag{3.12}$$

We use that

$$\mathrm{Li}_3(t) = -\int_0^1 \frac{\mathrm{d}s}{s-\frac{1}{t}}\circ\frac{\mathrm{d}s}{s}\circ\frac{\mathrm{d}s}{s} = -\int_{0\le s_1\le s_2\le s_3\le t}\frac{\mathrm{d}s_1}{s_1-1}\frac{\mathrm{d}s_2}{s_2}\frac{\mathrm{d}s_3}{s_3}.$$

The term in (3.12) with $\frac{a}{t^2+a^2}$ is equal to

$$\int_0^1\int_{0\le s_1\le s_2\le s_3\le t}\left(\frac{1}{s_1+1}-\frac{1}{s_1-1}\right)\,\mathrm{d}s_1\,\frac{\mathrm{d}s_2}{s_2}\frac{\mathrm{d}s_3}{s_3}\,\frac{a}{t^2+a^2}\,\mathrm{d}t.$$

Writing $\frac{a}{t^2+a^2}=\frac{\mathrm{i}}{2}\left(\frac{1}{t+\mathrm{i}a}-\frac{1}{t-\mathrm{i}a}\right)$, we get

$$\frac{\mathrm{i}}{2}\left(\mathrm{I}_{3,1}\left(-1:-\mathrm{i}a:1\right)-\mathrm{I}_{3,1}\left(1:-\mathrm{i}a:1\right)+\mathrm{I}_{3,1}\left(1:\mathrm{i}a:1\right)-\mathrm{I}_{3,1}\left(-1:\mathrm{i}a:1\right)\right)$$

$$=\frac{\mathrm{i}}{2}\left(\mathrm{Li}_{3,1}\left(\mathrm{i}a,\frac{\mathrm{i}}{a}\right)-\mathrm{Li}_{3,1}\left(-\mathrm{i}a,\frac{\mathrm{i}}{a}\right)+\mathrm{Li}_{3,1}\left(\mathrm{i}a,-\frac{\mathrm{i}}{a}\right)-\mathrm{Li}_{3,1}\left(-\mathrm{i}a,-\frac{\mathrm{i}}{a}\right)\right).$$

The other integral can be computed in a similar way, (or taking advantage of the symmetry $a\leftrightarrow\frac{1}{a}$):

$$\frac{\mathrm{i}}{2}\left(\mathrm{Li}_{3,1}\left(\frac{\mathrm{i}}{a},\mathrm{i}a\right)-\mathrm{Li}_{3,1}\left(-\frac{\mathrm{i}}{a},\mathrm{i}a\right)+\mathrm{Li}_{3,1}\left(\frac{\mathrm{i}}{a},-\mathrm{i}a\right)-\mathrm{Li}_{3,1}\left(-\frac{\mathrm{i}}{a},-\mathrm{i}a\right)\right).$$

Then integral (3.12) is equal to $\frac{\mathrm{i}}{2}\mathfrak{L}_{3,1}^a(\mathrm{i},\mathrm{i})$.

The second term in equation (3.11) is

$$\frac{2}{\pi}\int_0^1\log\left(\frac{1}{t}\right)\frac{a}{a^2t^2+1}\,\mathrm{d}t=\frac{\mathrm{i}}{\pi}\int_0^1\int_t^1\frac{\mathrm{d}s}{s}\left(\frac{1}{t+\frac{\mathrm{i}}{a}}-\frac{1}{t-\frac{\mathrm{i}}{a}}\right)\,\mathrm{d}t=\frac{\mathrm{i}}{\pi}\left(\mathrm{I}_2\left(-\frac{\mathrm{i}}{a}:1\right)-\mathrm{I}_2\left(\frac{\mathrm{i}}{a}:1\right)\right)$$

$$=-\frac{\mathrm{i}}{\pi}(\mathrm{Li}_2(\mathrm{i}a)-\mathrm{Li}_2(-\mathrm{i}a))=-\frac{\mathrm{i}}{\pi}\mathfrak{L}_2^a(\mathrm{i}).$$

It is now easy to obtain the statement. $\square$

3.2 Examples of n-variable families

We are now going to study a different method to perform the integrals of last section. This method allows us to compute the Mahler measure of the polynomials of the first and second kind for $a = 1$ and for arbitrary n. In addition to those examples, we are also able to compute the Mahler measure of a third kind of rational functions:

$$1 + \left(\frac{1-x_1}{1+x_1}\right) \dots \left(\frac{1-x_n}{1+x_n}\right) x + \left(1 - \left(\frac{1-x_1}{1+x_1}\right) \dots \left(\frac{1-x_n}{1+x_n}\right)\right) y.$$

This computation is more subtle because the Mahler measure of $1 + \alpha x + (1-\alpha)y$ does depend on the absolute value of α.

For concreteness, we list the first values for each family in the following tables:

$\pi^3 m\left(1 + \left(\frac{1-x_1}{1+x_1}\right)\left(\frac{1-x_2}{1+x_2}\right) x + \left(1 - \left(\frac{1-x_1}{1+x_1}\right)\left(\frac{1-x_2}{1+x_2}\right)\right) y\right)$	$\frac{21\pi}{4}\zeta(3) + \frac{\pi^3}{2}\log 2$
$\pi^5 m\left(1 + \left(\frac{1-x_1}{1+x_1}\right) \dots \left(\frac{1-x_4}{1+x_4}\right) x + \left(1 - \left(\frac{1-x_1}{1+x_1}\right) \dots \left(\frac{1-x_4}{1+x_4}\right)\right) y\right)$	$\frac{155\pi}{4}\zeta(5) + \frac{14\pi^3}{3}\zeta(3) + \frac{\pi^5}{2}\log 2$
$\pi^2 m\left(1 + \left(\frac{1-x_1}{1+x_1}\right) x + \left(1 - \left(\frac{1-x_1}{1+x_1}\right)\right) y\right)$	$\frac{7}{2}\zeta(3) + \frac{\pi^2}{2}\log 2$
$\pi^4 m\left(1 + \left(\frac{1-x_1}{1+x_1}\right) \dots \left(\frac{1-x_3}{1+x_3}\right) x + \left(1 - \left(\frac{1-x_1}{1+x_1}\right) \dots \left(\frac{1-x_3}{1+x_3}\right)\right) y\right)$	$31\zeta(5) + \frac{7\pi^2}{3}\zeta(3) + \frac{\pi^4}{2}\log 2$

$\pi^2 m\left(1+\left(\frac{1-x_1}{1+x_1}\right)\left(\frac{1-x_2}{1+x_2}\right)z\right)$	$7\,\zeta(3)$
$\pi^4 m\left(1+\left(\frac{1-x_1}{1+x_1}\right)\ldots\left(\frac{1-x_4}{1+x_4}\right)z\right)$	$62\zeta(5)+\frac{14\pi^2}{3}\zeta(3)$
$\pi^6 m\left(1+\left(\frac{1-x_1}{1+x_1}\right)\ldots\left(\frac{1-x_6}{1+x_6}\right)z\right)$	$381\zeta(7)+62\pi^2\zeta(5)+\frac{56\pi^4}{15}\zeta(3)$
$\pi^8 m\left(1+\left(\frac{1-x_1}{1+x_1}\right)\ldots\left(\frac{1-x_8}{1+x_8}\right)z\right)$	$2044\zeta(9)+508\pi^2\zeta(7)+\frac{868\pi^4}{15}\zeta(5)+\frac{16\pi^6}{5}\zeta(3)$
$\pi m\left(1+\left(\frac{1-x_1}{1+x_1}\right)z\right)$	$2\mathrm{L}(\chi_{-4},2)$
$\pi^3 m\left(1+\left(\frac{1-x_1}{1+x_1}\right)\ldots\left(\frac{1-x_3}{1+x_3}\right)z\right)$	$24\mathrm{L}(\chi_{-4},4)+\pi^2\mathrm{L}(\chi_{-4},2)$
$\pi^5 m\left(1+\left(\frac{1-x_1}{1+x_1}\right)\ldots\left(\frac{1-x_5}{1+x_5}\right)z\right)$	$160\mathrm{L}(\chi_{-4},6)+20\pi^2\mathrm{L}(\chi_{-4},4)+\frac{3\pi^4}{4}\mathrm{L}(\chi_{-4},2)$
$\pi^7 m\left(1+\left(\frac{1-x_1}{1+x_1}\right)\ldots\left(\frac{1-x_7}{1+x_7}\right)z\right)$	$896\mathrm{L}(\chi_{-4},8)+\frac{560}{3}\pi^2\mathrm{L}(\chi_{-4},6)+$ $\frac{259}{15}\pi^4\mathrm{L}(\chi_{-4},4)+\frac{5}{8}\pi^6\mathrm{L}(\chi_{-4},2)$

$\pi^2 m\,(1+x+(1+y)z)$	$\frac{7}{2}\zeta(3)$
$\pi^4 m\left(1+x+\left(\frac{1-x_1}{1+x_1}\right)\left(\frac{1-x_2}{1+x_2}\right)(1+y)z\right)$	$93\zeta(5)$
$\pi^6 m\left(1+x+\left(\frac{1-x_1}{1+x_1}\right)\dots\left(\frac{1-x_4}{1+x_4}\right)(1+y)z\right)$	$\frac{1905}{2}\zeta(7)+31\pi^2\zeta(5)$
$\pi^8 m\left(1+x+\left(\frac{1-x_1}{1+x_1}\right)\dots\left(\frac{1-x_6}{1+x_6}\right)(1+y)z\right)$	$7154\zeta(9)+635\pi^2\zeta(7)+\frac{248\pi^4}{15}\zeta(5)$
$\pi^3 m\left(1+x+\left(\frac{1-x_1}{1+x_1}\right)(1+y)z\right)$	$2\pi^2\mathrm{L}(\chi_{-4},2)+2\mathrm{i}\mathfrak{L}_{3,1}(\mathrm{i},\mathrm{i})$
$\pi^5 m\left(1+x+\left(\frac{1-x_1}{1+x_1}\right)\dots\left(\frac{1-x_3}{1+x_3}\right)(1+y)z\right)$	$24\pi^2\mathrm{L}(\chi_{-4},4)+\pi^4\mathrm{L}(\chi_{-4},2)+16\mathrm{i}\mathfrak{L}_{3,3}(\mathrm{i},\mathrm{i})+4\pi\mathrm{i}\mathfrak{L}_{3,1}(\mathrm{i},\mathrm{i})$

3.2.1 An important integral

Before showing the idea of this computation, we will need to prove some auxiliary statements.

We will need to compute the integral $\int_0^\infty \frac{x\log^k x\,\mathrm{d}x}{(x^2+a^2)(x^2+b^2)}$. The following Lemma will help:

Lemma 10 *We have the following integral:*

$$\int_0^\infty \frac{x^\alpha\,\mathrm{d}x}{(x^2+a^2)(x^2+b^2)} = \frac{\pi(a^{\alpha-1}-b^{\alpha-1})}{2\cos\frac{\pi\alpha}{2}(b^2-a^2)} \qquad \text{for} \quad 0<\alpha<1, \quad a,b\neq 0. \quad (3.13)$$

PROOF. We write the integral as a difference of two integrals:

$$\int_0^\infty \frac{x^\alpha \, \mathrm{d}x}{(x^2+a^2)(x^2+b^2)} = \int_0^\infty \left(\frac{1}{x^2+a^2} - \frac{1}{x^2+b^2} \right) \frac{x^\alpha \, \mathrm{d}x}{b^2-a^2}. \tag{3.14}$$

Now, when $0 < \alpha < 1$,

$$\int_0^\infty \frac{x^\alpha \, \mathrm{d}x}{x^2+a^2} = \frac{1}{1-\mathrm{e}^{2\pi \mathrm{i}\alpha}} 2\pi \mathrm{i} \sum_{x \neq 0} \mathrm{Res} \left\{ \frac{x^\alpha}{x^2+a^2} \right\}$$

(see, for instance, section 5.3 in chapter 4 of Ahlfors [1]). Then,

$$\int_0^\infty \frac{x^\alpha \, \mathrm{d}x}{x^2+a^2} = \frac{\pi a^{\alpha-1}}{2\cos\frac{\pi\alpha}{2}}.$$

Thus, we get the result.□

By continuity, the formula in the statement is true for $\alpha = 1$, in fact the integral converges for $-1 < \alpha < 3$. By computing $\int_0^\infty \frac{x^\alpha \, \mathrm{d}x}{x(x^2+a^2)}$, which converges for $0 < \alpha < 1$, it is possible extend equality (3.13) for $-1 < \alpha < 1$. By considering $\int_0^\infty \left(\frac{1}{x^2+a^2} + \frac{1}{x^2+b^2} \right) x^\alpha \, \mathrm{d}x$ equality (3.13) is true for $-1 < \alpha < 3$.

Next, we will define some polynomials that will be used in the formula for $\int_0^\infty \frac{x \log^k x \, \mathrm{d}x}{(x^2+a^2)(x^2+b^2)}$.

Definition 11 *Let $P_k(x) \in \mathbb{Q}[x]$, $k \geq 0$, be defined recursively as follows:*

$$P_k(x) = \frac{x^{k+1}}{k+1} + \frac{1}{k+1} \sum_{j>1 \, (\mathrm{odd})}^{k+1} (-1)^{\frac{j+1}{2}} \binom{k+1}{j} P_{k+1-j}(x). \tag{3.15}$$

For instance, the first $P_k(x)$ are:

$$\begin{aligned} P_0(x) &= x, \\ P_1(x) &= \frac{x^2}{2}, \\ P_2(x) &= \frac{x^3}{3} + \frac{x}{3}, \end{aligned}$$

$$
\begin{aligned}
P_3(x) &= \frac{x^4}{4} + \frac{x^2}{2}, \\
P_4(x) &= \frac{x^5}{5} + \frac{2x^3}{3} + \frac{7x}{15}, \\
P_5(x) &= \frac{x^6}{6} + \frac{5x^4}{6} + \frac{7x^2}{6}.
\end{aligned}
$$

Lemma 12 *The following properties are true*

1. $\deg P_k = k + 1$.

2. $P_k(x)$ *is an odd (even) function for* k *even (odd).*

3. $P_k(0) = 0$.

4. $P_{2l}(\mathrm{i}) = 0$ *for* $l > 0$.

5. $(2l+1)P_{2l}(x) = \frac{\partial}{\partial x} P_{2l+1}(x)$.

6. $2lP_{2l-1}(x) = \frac{\partial}{\partial x} P_{2l}(x) - \frac{\partial}{\partial x} P_{2l}(0)$.

The above properties can be easily proved by induction. These properties, together with P_0, determine the whole family of polynomials P_k because of the recursive nature of the definition. At this point, it should be noted that this family is closely related to Bernoulli polynomials. Indeed,

$$
P_k(x) = \frac{2\mathrm{i}^{k+1}}{k+1}\left(B_{k+1}\left(\frac{x}{\mathrm{i}}\right) - 2^k B_{k+1}\left(\frac{x}{2\mathrm{i}}\right)\right) + \frac{(2^{k+1}-2)\mathrm{i}^{k+1}}{k+1} B_{k+1} \tag{3.16}
$$

where $B_k(x)$ is the kth Bernoulli polynomial. The explicit form of the polynomials P_k is only needed in order to perform the computation of the Mahler measures for the third kind of polynomials.

We are now ready to prove the key Proposition for the main Theorem:

Proposition 13 *We have:*

$$\int_0^\infty \frac{x \log^k x \, \mathrm{d}x}{(x^2+a^2)(x^2+b^2)} = \left(\frac{\pi}{2}\right)^{k+1} \frac{P_k\left(\frac{2\log a}{\pi}\right) - P_k\left(\frac{2\log b}{\pi}\right)}{a^2-b^2}. \tag{3.17}$$

PROOF. The idea, suggested by Rodriguez-Villegas, is to obtain the value of the integral in the statement by differentiating k times the integral of Lemma 10 and then evaluating at $\alpha = 1$. Let

$$f(\alpha) = \frac{\pi(a^{\alpha-1} - b^{\alpha-1})}{2\cos\frac{\pi\alpha}{2}(b^2-a^2)}$$

which is the value of the integral in the Lemma 10. In other words, we have

$$f^{(k)}(1) = \int_0^\infty \frac{x \log^k x \, \mathrm{d}x}{(x^2+a^2)(x^2+b^2)}.$$

By developing in power series around $\alpha = 1$, we obtain

$$f(\alpha)\cos\frac{\pi\alpha}{2} = \frac{\pi}{2(b^2-a^2)} \sum_{n=0}^\infty \frac{\log^n a - \log^n b}{n!}(\alpha-1)^n.$$

By differentiating k times,

$$\sum_{j=0}^k \binom{k}{j} f^{(k-j)}(\alpha) \left(\cos\frac{\pi\alpha}{2}\right)^{(j)} = \frac{\pi}{2(b^2-a^2)} \sum_{n=0}^\infty \frac{\log^{n+k} a - \log^{n+k} b}{n!}(\alpha-1)^n.$$

We evaluate in $\alpha = 1$,

$$\sum_{j=0\,(\mathrm{odd})}^k (-1)^{\frac{j+1}{2}} \binom{k}{j} f^{(k-j)}(1) \left(\frac{\pi}{2}\right)^j = \frac{\pi(\log^k a - \log^k b)}{2(b^2-a^2)}.$$

As a consequence, we obtain

$$f^{(k)}(1) = \frac{1}{k+1} \sum_{j>1\,(\mathrm{odd})}^{k+1} (-1)^{\frac{j+1}{2}} \binom{k+1}{j} f^{(k+1-j)}(1) \left(\frac{\pi}{2}\right)^{j-1} + \frac{\log^{k+1} a - \log^{k+1} b}{(k+1)(a^2-b^2)}.$$

When $k = 0$,

$$f^{(0)}(1) = f(1) = \frac{\log a - \log b}{a^2 - b^2} = \frac{\pi}{2} \frac{P_0\left(\frac{2\log a}{\pi}\right) - P_0\left(\frac{2\log b}{\pi}\right)}{a^2 - b^2}.$$

The general result follows by induction on k and the definition of P_k. $\square$

3.2.2 An identity for symmetric polynomials

In order to deal with the polynomials P_k, we will need to manage certain identities of symmetric polynomials. More specifically, we are going to use the following result:

Proposition 14

$$\begin{aligned} 2n(-1)^l s_{n-l}(2^2, \ldots, (2n-2)^2) &= \sum_{h=l}^{n} (-1)^h \binom{2h}{2l-1} s_{n-h}(1^2, \ldots, (2n-1)^2) \\ (2n+1)(-1)^l s_{n-l}(1^2, \ldots, (2n-1)^2) &= \sum_{h=l}^{n} (-1)^h \binom{2h+1}{2l} s_{n-h}(2^2, \ldots, (2n)^2) \end{aligned}$$

PROOF. These equalities are easier to prove if we think of the symmetric functions as coefficients of certain polynomials, as in equation (3.39).

In order to prove the first equality, multiply by x^{2l} on both sides and add for $l = 1, \ldots, n$:

$$2n \sum_{l=1}^{n} s_{n-l}(2^2, \ldots, (2n-2)^2)(-1)^l x^{2l}$$

$$= \sum_{l=1}^{n} \sum_{h=l}^{n} (-1)^h \binom{2h}{2l-1} s_{n-h}(1^2, \ldots, (2n-1)^2) x^{2l}.$$

The statement we have to prove becomes:

$$2n\prod_{j=0}^{n-1}((2j)^2-x^2)=\sum_{h=1}^{n}(-1)^h s_{n-h}(1^2,\dots,(2n-1)^2)\sum_{l=1}^{h}\binom{2h}{2l-1}x^{2l}. \tag{3.18}$$

The right side of (3.18) is

$$=\sum_{h=0}^{n}(-1)^h s_{n-h}(1^2,\dots,(2n-1)^2)\frac{x}{2}((x+1)^{2h}-(x-1)^{2h})$$

$$=\frac{x}{2}\left(\prod_{j=1}^{n}((2j-1)^2-(x+1)^2)-\prod_{j=1}^{n}((2j-1)^2-(x-1)^2)\right)$$

$$=\frac{x}{2}\left(\prod_{j=1}^{n}(2j+x)(2j-2-x)-\prod_{j=1}^{n}(2j-x)(2j-2+x)\right)$$

$$=((-x)(2n+x)-x(2n-x))\frac{x}{2}\prod_{j=1}^{n-1}((2j)^2-x^2)=2n\prod_{j=0}^{n-1}((2j)^2-x^2)$$

so equation (3.18) is true.

The second equality can be proved in a similar fashion. □

3.2.3 Description of the general method

The main result is proved by first examining a general situation and then specializing to the particular families of the statement.

Let $P_\alpha \in \mathbb{C}[\mathbf{x}]$ such that its coefficients depend polynomially on a parameter $\alpha \in \mathbb{C}$. We replace α by $\left(\frac{x_1-1}{x_1+1}\right)\dots\left(\frac{x_n-1}{x_n+1}\right)$ and obtain a new polynomial $\tilde{P} \in \mathbb{C}[\mathbf{x}, x_1,\dots,x_n]$. By definition of Mahler measure, it is easy to see that

$$m(\tilde{P})=\frac{1}{(2\pi\mathrm{i})^n}\int_{\mathbb{T}^n} m\left(P_{\left(\frac{x_1-1}{x_1+1}\right)\dots\left(\frac{x_n-1}{x_n+1}\right)}\right)\frac{\mathrm{d}x_1}{x_1}\cdots\frac{\mathrm{d}x_n}{x_n}.$$

We perform a change of variables to polar coordinates, $x_j = \mathrm{e}^{\mathrm{i}\theta_j}$:

$$= \frac{1}{(2\pi)^n} \int_{-\pi}^{\pi} \cdots \int_{-\pi}^{\pi} m\left(P_{\mathrm{i}^n \tan\left(\frac{\theta_1}{2}\right) \ldots \tan\left(\frac{\theta_n}{2}\right)}\right) \, \mathrm{d}\theta_1 \ldots \, \mathrm{d}\theta_n.$$

Set $x_i = \tan\left(\frac{\theta_i}{2}\right)$. We get,

$$= \frac{1}{\pi^n} \int_{-\infty}^{\infty} \cdots \int_{-\infty}^{\infty} m\left(P_{\mathrm{i}^n x_1 \ldots x_n}\right) \frac{\mathrm{d}x_1}{x_1^2+1} \cdots \frac{\mathrm{d}x_n}{x_n^2+1}$$

$$= \frac{2^n}{\pi^n} \int_{0}^{\infty} \cdots \int_{0}^{\infty} m\left(P_{\mathrm{i}^n x_1 \ldots x_n}\right) \frac{\mathrm{d}x_1}{x_1^2+1} \cdots \frac{\mathrm{d}x_n}{x_n^2+1}.$$

Making one more change, $\widehat{x}_1 = x_1, \ldots, \widehat{x}_{n-1} = x_1 \ldots x_{n-1}, \widehat{x}_n = x_1 \ldots x_n$:

$$= \frac{2^n}{\pi^n} \int_{0}^{\infty} \cdots \int_{0}^{\infty} m\left(P_{\mathrm{i}^n \widehat{x}_n}\right) \frac{\widehat{x}_1 \, \mathrm{d}\widehat{x}_1}{\widehat{x}_1^2+1} \frac{\widehat{x}_2 \, \mathrm{d}\widehat{x}_2}{\widehat{x}_2^2+\widehat{x}_1^2} \cdots \frac{\widehat{x}_{n-1} \, \mathrm{d}\widehat{x}_{n-1}}{\widehat{x}_{n-1}^2+\widehat{x}_{n-2}^2} \frac{\mathrm{d}\widehat{x}_n}{\widehat{x}_n^2+\widehat{x}_{n-1}^2}.$$

We need to compute this integral. In most of our cases, the Mahler measure of P_α depends only on the absolute value of α. If not, for each n we may modify P, such that it absorbs the number i^n. From now on, we will write $m(P_x)$ instead of $m(P_{\mathrm{i}^n x})$ to simplify notation.

By iterating Proposition 13, the above integral can be written as a linear combination, with coefficients that are rational numbers and powers of π in such a way that the weights are homogeneous, of integrals of the form

$$\int_0^{\infty} m\left(P_x\right) \log^j x \frac{\mathrm{d}x}{x^2 \pm 1}.$$

It is easy to see that j is even iff n is odd and the corresponding sign in that case is "+".

We are going to compute these coefficients.

Let us establish some convenient notation:

Definition 15 *Let $a_{n,h} \in \mathbb{Q}$ be defined for $n \geq 1$ and $h = 0, \ldots, n-1$ by*

$$\int_0^\infty \cdots \int_0^\infty m\left(P_{x_1}\right) \frac{x_{2n}\,\mathrm{d}x_{2n}}{x_{2n}^2+1} \frac{x_{2n-1}\,\mathrm{d}x_{2n-1}}{x_{2n-1}^2+x_{2n}^2} \cdots \frac{\mathrm{d}x_1}{x_1^2+x_2^2}$$

$$= \sum_{h=1}^{n} a_{n,h-1} \left(\frac{\pi}{2}\right)^{2n-2h} \int_0^\infty m\left(P_x\right) \log^{2h-1} x \frac{\mathrm{d}x}{x^2-1}. \tag{3.19}$$

Let $b_{n,h} \in \mathbb{Q}$ be defined for $n \geq 0$ and $h = 0, \ldots, n$ by

$$\int_0^\infty \cdots \int_0^\infty m\left(P_{x_1}\right) \frac{x_{2n+1}\,\mathrm{d}x_{2n+1}}{x_{2n+1}^2+1} \frac{x_{2n}\,\mathrm{d}x_{2n}}{x_{2n}^2+x_{2n+1}^2} \cdots \frac{\mathrm{d}x_1}{x_1^2+x_2^2}$$

$$= \sum_{h=0}^{n} b_{n,h} \left(\frac{\pi}{2}\right)^{2n-2h} \int_0^\infty m\left(P_x\right) \log^{2h} x \frac{\mathrm{d}x}{x^2+1}. \tag{3.20}$$

We claim:

Lemma 16

$$\sum_{h=0}^{n} b_{n,h} x^{2h} = \sum_{h=1}^{n} a_{n,h-1} \left(P_{2h-1}(x) - P_{2h-1}(\mathrm{i})\right) \tag{3.21}$$

$$\sum_{h=1}^{n+1} a_{n+1,h-1} x^{2h-1} = \sum_{h=0}^{n} b_{n,h} P_{2h}(x) \tag{3.22}$$

PROOF. First observe that

$$\sum_{h=0}^{n} b_{n,h} \left(\frac{\pi}{2}\right)^{2n-2h} \int_0^\infty m\left(P_x\right) \log^{2h} x \frac{\mathrm{d}x}{x^2+1}$$

$$= \sum_{h=1}^{n} a_{n,h-1} \left(\frac{\pi}{2}\right)^{2n-2h} \int_0^\infty \int_0^\infty m\left(P_x\right) y \log^{2h-1} y \frac{\mathrm{d}y}{y^2-1} \frac{\mathrm{d}x}{x^2+y^2}. \tag{3.23}$$

But

$$\int_0^\infty \frac{y \log^{2h-1} y\,\mathrm{d}y}{(y^2+x^2)(y^2-1)} = \left(\frac{\pi}{2}\right)^{2h} \frac{P_{2h-1}\left(\frac{2\log x}{\pi}\right) - P_{2h-1}(\mathrm{i})}{x^2+1}$$

by applying Proposition 13 for $a = x$ and $b = \mathrm{i}$.

The right side of equation (3.23) becomes

$$= \sum_{h=1}^{n} a_{n,h-1} \left(\frac{\pi}{2}\right)^{2n} \int_0^\infty m\left(P_x\right) \left(P_{2h-1}\left(\frac{2\log x}{\pi}\right) - P_{2h-1}\left(\mathrm{i}\right)\right) \frac{\mathrm{d}x}{x^2+1}.$$

As a consequence, equation (3.23) translates into the polynomial identity (3.21).

On the other hand,

$$\sum_{h=1}^{n+1} a_{n+1,h-1} \left(\frac{\pi}{2}\right)^{2n+2-2h} \int_0^\infty m\left(P_x\right) \log^{2h-1} x \frac{\mathrm{d}x}{x^2-1}$$

$$= \sum_{h=0}^{n} b_{n,h} \left(\frac{\pi}{2}\right)^{2n-2h} \int_0^\infty \int_0^\infty m\left(P_x\right) y \log^{2h} y \frac{\mathrm{d}y}{y^2+1} \frac{\mathrm{d}x}{x^2+y^2}. \tag{3.24}$$

But

$$\int_0^\infty \frac{y \log^{2h} y \, \mathrm{d}y}{(y^2+x^2)(y^2+1)} = \left(\frac{\pi}{2}\right)^{2h+1} \frac{P_{2h}\left(\frac{2\log x}{\pi}\right) - P_{2h}\left(0\right)}{x^2-1}$$

by applying Proposition 13 for $a = x$ and $b = 1$.

So the right side of (3.24) becomes

$$= \sum_{h=0}^{n} b_{n,h} \left(\frac{\pi}{2}\right)^{2n+1} \int_0^\infty m\left(P_y\right) P_{2h}\left(\frac{2\log x}{\pi}\right) \frac{\mathrm{d}x}{x^2-1}$$

which translates into the identity (3.22). □

Theorem 17 *We have:*

$$\sum_{h=0}^{n-1} a_{n,h} x^{2h} = \frac{(x^2+2^2)\ldots(x^2+(2n-2)^2)}{(2n-1)!} \tag{3.25}$$

for $n \geq 1$ *and* $h = 0, \ldots, n-1$, *and*

$$\sum_{h=0}^{n} b_{n,h} x^{2h} = \frac{(x^2+1^2)\ldots(x^2+(2n-1)^2)}{(2n)!} \tag{3.26}$$

for $n \geq 0$ *and* $h = 0, \ldots, n$.

In other words,

$$a_{n,h} = \frac{s_{n-1-h}(2^2, \ldots, (2n-2)^2)}{(2n-1)!} \tag{3.27}$$

$$b_{n,h} = \frac{s_{n-h}(1^2, \ldots, (2n-1)^2)}{(2n)!} \tag{3.28}$$

PROOF. For $2n+1 = 1$, $n = 0$ and the integral becomes

$$\int_0^\infty m\left(P_x\right) \frac{\mathrm{d}x}{x^2+1}$$

so $b_{0,0} = 1$.

For $2n = 2$, $n = 1$ and we have

$$\int_0^\infty \int_0^\infty m\left(P_x\right) \frac{y\,\mathrm{d}y}{y^2+1} \frac{\mathrm{d}x}{x^2+y^2} = \int_0^\infty m\left(P_x\right) \frac{\log x\,\mathrm{d}x}{x^2-1}$$

so $a_{1,0} = 1$.

Then the statement is true for the first two cases.

We proceed by induction. Suppose that

$$a_{n,h} = \frac{s_{n-1-h}(2^2, \ldots, (2n-2)^2)}{(2n-1)!}.$$

We have to prove that

$$b_{n,h} = \frac{s_{n-h}(1^2, \ldots, (2n-1)^2)}{(2n)!}.$$

By Lemma 16, it is enough to prove that

$$\sum_{h=0}^{n} s_{n-h}(1^2,\ldots,(2n-1)^2)x^{2h} = 2n\sum_{h=1}^{n} s_{n-h}(2^2,\ldots,(2n-2)^2)\left(P_{2h-1}(x) - P_{2h-1}(\mathrm{i})\right). \tag{3.29}$$

Recall equation (3.15) that defines the polynomials P_k, from which the following identity may be deduced:

$$x^{2h} = \sum_{k=0}^{h-1}(-1)^k\binom{2h}{2k+1}P_{2h-2k-1}(x). \tag{3.30}$$

Multiplying equation (3.30) by $s_{n-h}(1^2,\ldots,(2n-1)^2)$ and adding, we get

$$\sum_{h=0}^{n} s_{n-h}(1^2,\ldots,(2n-1)^2)x^{2h}$$

$$= \sum_{h=1}^{n} s_{n-h}(1^2,\ldots,(2n-1)^2)\sum_{k=0}^{h-1}(-1)^k\binom{2h}{2k+1}P_{2h-2k-1}(x) + s_n(1^2,\ldots,(2n-1)^2).$$

Now let us evaluate the above equality at $x = \mathrm{i}$, we obtain

$$\sum_{h=0}^{n} s_{n-h}(1^2,\ldots,(2n-1)^2)(-1)^h$$

$$= \sum_{h=1}^{n} s_{n-h}(1^2,\ldots,(2n-1)^2)\sum_{k=0}^{h-1}(-1)^k\binom{2h}{2k+1}P_{2h-2k-1}(\mathrm{i}) + s_n(1^2,\ldots,(2n-1)^2).$$

But

$$\sum_{h=0}^{n} s_{n-h}(1^2,\ldots,(2n-1)^2)(-1)^h = (x+1^2)\ldots(x+(2n-1)^2)|_{x=-1} = 0,$$

from where

$$\sum_{h=0}^{n} s_{n-h}(1^2,\ldots,(2n-1)^2)x^{2h}$$

$$=\sum_{h=1}^{n} s_{n-h}(1^2,\ldots,(2n-1)^2)\sum_{k=0}^{h-1}(-1)^k\binom{2h}{2k+1}(P_{2h-2k-1}(x)-P_{2h-2k-1}(\mathrm{i})).$$

Let $l=h-k$, then this becomes

$$=\sum_{h=1}^{n} s_{n-h}(1^2,\ldots,(2n-1)^2)\sum_{l=1}^{h}(-1)^{h-l}\binom{2h}{2l-1}(P_{2l-1}(x)-P_{2l-1}(\mathrm{i}))$$

$$=\sum_{l=1}^{n}\left(\sum_{h=l}^{n}(-1)^h\binom{2h}{2l-1}s_{n-h}(1^2,\ldots,(2n-1)^2)\right)(-1)^l(P_{2l-1}(x)-P_{2l-1}(\mathrm{i})),$$

and equality (3.29) is proved by applying Proposition 14.

Now suppose that

$$b_{n,h}=\frac{s_{n-h}(1^2,\ldots,(2n-1)^2)}{(2n)!},$$

we want to see that

$$a_{n+1,h}=\frac{s_{n-h}(2^2,\ldots,(2n)^2)}{(2n+1)!}.$$

Then it is enough to prove that

$$\sum_{h=0}^{n} s_{n-h}(2^2,\ldots,(2n)^2)x^{2h+1}=(2n+1)\sum_{h=0}^{n} s_{n-h}(1^2,\ldots,(2n-1)^2)P_{2h}(x) \tag{3.31}$$

by Lemma 16.

Equation (3.15) implies

$$x^{2h+1}=\sum_{k=0}^{h}(-1)^k\binom{2h+1}{2k+1}P_{2h-2k}(x),$$

and so,

$$\sum_{h=0}^{n} s_{n-h}(2^2,\ldots,(2n)^2)x^{2h+1}$$

$$= \sum_{h=0}^{n} s_{n-h}(2^2,\ldots,(2n)^2)\sum_{k=0}^{h}(-1)^k\binom{2h+1}{2k+1}P_{2h-2k}(x).$$

Let $l = h-k$, then

$$= \sum_{h=0}^{n} s_{n-h}(2^2,\ldots,(2n)^2)\sum_{l=0}^{h}(-1)^{h-l}\binom{2h+1}{2l}P_{2l}(x)$$

$$= \sum_{l=0}^{n}\left(\sum_{h=l}^{n}(-1)^h\binom{2h+1}{2l}s_{n-h}(2^2,\ldots,(2n)^2)\right)(-1)^l P_{2l}(x)$$

which proves (3.31) by Proposition 14. □

3.2.4 The results

We have obtained

Theorem 18 *(i) For $n \geq 1$:*

$$\pi^{2n} m\left(1+\left(\frac{1-x_1}{1+x_1}\right)\ldots\left(\frac{1-x_{2n}}{1+x_{2n}}\right)z\right)$$

$$= \frac{1}{(2n-1)!}\sum_{h=1}^{n} s_{n-h}(2^2,\ldots,(2n-2)^2)\frac{(2h)!(2^{2h+1}-1)}{2}\pi^{2n-2h}\zeta(2h+1)$$

$$= \frac{(2\pi)^{2n}}{(2n-1)!}\sum_{h=1}^{n} s_{n-h}(1^2,\ldots,(n-1)^2)(2^{2h+1}-1)(-1)^h\zeta'(-2h). \tag{3.32}$$

For $n \geq 0$:

$$\pi^{2n+1} m\left(1+\left(\frac{1-x_1}{1+x_1}\right)\dots\left(\frac{1-x_{2n+1}}{1+x_{2n+1}}\right)z\right)$$

$$= \frac{1}{(2n)!}\sum_{h=0}^{n} s_{n-h}(1^2,\dots,(2n-1)^2)(2h+1)!2^{2h+1}\pi^{2n-2h}\mathrm{L}(\chi_{-4},2h+2)$$

$$= \frac{\pi^{2n+1}}{(2n)!}\sum_{h=0}^{n} s_{n-h}(1^2,\dots,(2n-1)^2)(-1)^h\mathrm{L}'(\chi_{-4},-2h-1). \tag{3.33}$$

(ii) For $n \geq 1$:

$$\pi^{2n+2} m\left(1+x+\left(\frac{1-x_1}{1+x_1}\right)\dots\left(\frac{1-x_{2n}}{1+x_{2n}}\right)(1+y)z\right)$$

$$= \frac{1}{(2n-1)!}\sum_{h=1}^{n}\frac{(2h+2)!(2^{2h+3}-1)}{8}$$

$$\left(\sum_{l=0}^{n-h} s_{n-h-l}(2^2,\dots,(2n-2)^2)\binom{2(l+h)}{2h}(-1)^l\frac{2^{2l}}{l+h}B_{2l}\right)\pi^{2n-2h}\zeta(2h+3)$$

$$= \frac{2^{2n}\pi^{2n+2}}{(2n-1)!}\sum_{h=1}^{n}(2^{2h+3}-1)$$

$$\left(\sum_{l=0}^{n-h} s_{n-h-l}(1^2,\dots,(n-1)^2)\binom{2(l+h)}{2h}\frac{(-1)^l}{l+h}B_{2l}\right)(-1)^{h+1}\zeta'(-2h-2)). \tag{3.34}$$

For $n \geq 0$:

$$\pi^{2n+3} m\left(1+x+\left(\frac{1-x_1}{1+x_1}\right)\dots\left(\frac{1-x_{2n+1}}{1+x_{2n+1}}\right)(1+y)z\right)$$

$$= \frac{1}{(2n)!}\sum_{h=0}^{n} s_{n-h}(1^2,\ldots,(2n-1)^2)$$

$$2^{2h+1}\pi^{2n-2h}\left(\mathrm{i}(2h)!\mathfrak{L}_{3,2h+1}(\mathrm{i},\mathrm{i})+(2h+1)!\pi^2\mathrm{L}(\chi_{-4},2h+2)\right).$$

(3.35)

(iii) For $n \geq 1$:

$$\pi^{2n+1}m\left(1+\left(\frac{1-x_1}{1+x_1}\right)\ldots\left(\frac{1-x_{2n}}{1+x_{2n}}\right)x+\left(1-\left(\frac{1-x_1}{1+x_1}\right)\ldots\left(\frac{1-x_{2n}}{1+x_{2n}}\right)\right)y\right)$$

$$= \frac{\pi^{2n+1}}{2}\log 2$$

$$+\frac{1}{(2n-1)!}\sum_{h=1}^{n} s_{n-h}(2^2,\ldots,(2n-2)^2)\frac{(2h)!(2^{2h+1}-1)}{4}\pi^{2n-2h+1}\zeta(2h+1)$$

$$+\frac{1}{(2n-1)!}\sum_{h=1}^{n}\frac{(2h)!(2^{2h+1}-1)}{4}$$

$$\left(\sum_{l=0}^{n-h} s_{n-h-l}(2^2,\ldots,(2n-2)^2)\binom{2(l+h)}{2l}(-1)^{l+1}\frac{2^{2l}(2^{2l-1}-1)}{l+h}B_{2l}\right)\pi^{2n-2h+1}\zeta(2h+1)$$

$$= \frac{\pi^{2n+1}}{2}\log 2$$

$$+\frac{2^{2n}\pi^{2n+1}}{(2n-1)!}\sum_{h=1}^{n} s_{n-h}(1^2,\ldots,(n-1)^2)(2^{2h+1}-1)(-1)^h\zeta'(-2h)$$

$$+\frac{2^{2n-1}\pi^{2n+1}}{(2n-1)!}\sum_{h=1}^{n}(2^{2h+1}-1)$$

$$\left(\sum_{l=0}^{n-h} s_{n-h-l}(1^2,\ldots,(n-1)^2)\binom{2(l+h)}{2l}(-1)^{l+1}\frac{(2^{2l-1}-1)}{l+h}B_{2l}\right)(-1)^h\zeta'(-2h).$$

(3.36)

For $n \geq 0$:

$$\pi^{2n+2} m \left(1 + \left(\frac{1-x_1}{1+x_1}\right) \dots \left(\frac{1-x_{2n+1}}{1+x_{2n+1}}\right) x + \left(1 - \left(\frac{1-x_1}{1+x_1}\right) \dots \left(\frac{1-x_{2n+1}}{1+x_{2n+1}}\right)\right) y\right)$$

$$= \frac{\pi^{2n+2}}{2} \log 2$$

$$+ \frac{1}{(2n+1)!} \sum_{h=0}^{n} s_{n-h}(2^2, \dots, (2n)^2) \frac{(2h+2)!(2^{2h+3}-1)}{4} \pi^{2n-2h} \zeta(2h+3)$$

$$+ \frac{1}{(2n-1)!} \sum_{h=1}^{n} \frac{(2h)!(2^{2h+1}-1)}{4}$$

$$\left(\sum_{l=0}^{n-h} s_{n-h-l}(2^2, \dots, (2n-2)^2) \binom{2(l+h)}{2l} (-1)^{l+1} \frac{2^{2l}(2^{2l-1}-1)}{l+h} B_{2l}\right) \pi^{2n-2h+2} \zeta(2h+1)$$

$$= \frac{\pi^{2n+2}}{2} \log 2$$

$$+ \frac{2^{2n+1}\pi^{2n+2}}{(2n+1)!} \sum_{h=0}^{n} s_{n-h}(1^2, \dots, n^2)(2^{2h+3}-1)(-1)^{h+1} \zeta'(-2h-2)$$

$$+ \frac{2^{2n-1}\pi^{2n+2}}{(2n-1)!} \sum_{h=1}^{n} (2^{2h+1}-1)$$

$$\left(\sum_{l=0}^{n-h} s_{n-h-l}(1^2, \dots, (n-1)^2) \binom{2(l+h)}{2l} (-1)^{l+1} \frac{(2^{2l-1}-1)}{l+h} B_{2l}\right) (-1)^h \zeta'(-2h). \tag{3.37}$$

Here B_h is the h-Bernoulli number, $\frac{x}{e^x - 1} = \sum_{n=0}^{\infty} \frac{B_n x^n}{n!}$.

ζ is the Riemann zeta function. $L(\chi_{-4}, s)$ is the Dirichlet L-function associated to the real character χ_{-4} of conductor 4.

Also,

$$s_l(a_1,\dots,a_k)=\begin{cases}1 & \text{if} \quad l=0,\\ \sum_{i_1<\dots<i_l} a_{i_1}\dots a_{i_l} & \text{if} \quad 0<l\le k,\\ 0 & \text{if} \quad k<l\end{cases} \tag{3.38}$$

are the elementary symmetric polynomials, i.e.,

$$\prod_{i=1}^{k}(x+a_i)=\sum_{l=0}^{k} s_l(a_1,\dots,a_k)x^{k-l}. \tag{3.39}$$

PROOF. The proof of the whole theorem is very technical. We will content ourselves with showing how the prove the formulas corresponding to the first-kind case and we refer the reader to [31] for further details and the proof of the other equalities in the statement.

We start with the polynomial $P_\alpha(z)=1+\alpha z$, whose Mahler measure is

$$m(1+\alpha z)=\log^+|\alpha|.$$

For the even case we get

$$\pi^{2n} m\left(1+\left(\frac{1-x_1}{1+x_1}\right)\dots\left(\frac{1-x_{2n}}{1+x_{2n}}\right)z\right)$$

$$=2^{2n}\sum_{h=1}^{n} a_{n,h-1}\left(\frac{\pi}{2}\right)^{2n-2h}\int_0^\infty \log^+ x\log^{2h-1} x\frac{\mathrm{d}x}{x^2-1}$$

$$=\sum_{h=1}^{n}\frac{s_{n-h}(2^2,\dots,(2n-2)^2)}{(2n-1)!}2^{2h}\pi^{2n-2h}\int_1^\infty \log^{2h} x\frac{\mathrm{d}x}{x^2-1}.$$

Now set $y = \frac{1}{x}$,

$$= \sum_{h=1}^{n} \frac{s_{n-h}(2^2, \ldots, (2n-2)^2)}{(2n-1)!} 2^{2h} \pi^{2n-2h} \int_0^1 \log^{2h} y \frac{\mathrm{d}y}{1-y^2}.$$

Now observe that

$$\int_0^1 \log^{2h} y \frac{\mathrm{d}y}{1-y^2} = \frac{(2h)!}{2} \int_0^1 \left(\frac{1}{1-y} + \frac{1}{1+y} \right) \circ \underbrace{\frac{\mathrm{d}s}{s} \circ \ldots \circ \frac{\mathrm{d}s}{s}}_{2h \,\text{times}}$$

$$= \frac{(2h)!}{2} (\mathrm{Li}_{2h+1}(1) - \mathrm{Li}_{2h+1}(-1)) = (2h)! \left(1 - \frac{1}{2^{2h+1}} \right) \zeta(2h+1). \tag{3.40}$$

We obtain

$$\pi^{2n} m \left(1 + \left(\frac{1-x_1}{1+x_1} \right) \ldots \left(\frac{1-x_{2n}}{1+x_{2n}} \right) z \right)$$

$$= \sum_{h=1}^{n} \frac{s_{n-h}(2^2, \ldots, (2n-2)^2)}{(2n-1)!} 2^{2h} \pi^{2n-2h} (2h)! \left(1 - \frac{1}{2^{2h+1}} \right) \zeta(2h+1)$$

$$= \sum_{h=1}^{n} \frac{s_{n-h}(2^2, \ldots, (2n-2)^2)}{(2n-1)!} \frac{(2h)!(2^{2h+1}-1)}{2} \pi^{2n-2h} \zeta(2h+1).$$

For the odd case we get

$$\pi^{2n+1} m \left(1 + \left(\frac{1-x_1}{1+x_1} \right) \ldots \left(\frac{1-x_{2n+1}}{1+x_{2n+1}} \right) z \right)$$

$$= 2^{2n+1} \sum_{h=0}^{n} b_{n,h} \left(\frac{\pi}{2} \right)^{2n-2h} \int_0^\infty \log^+ x \log^{2h} x \frac{\mathrm{d}x}{x^2+1}$$

$$= \sum_{h=0}^{n} \frac{s_{n-h}(1^2, \ldots, (2n-1)^2)}{(2n)!} 2^{2h+1} \pi^{2n-2h} \int_1^\infty \log^{2h+1} x \frac{\mathrm{d}x}{x^2+1}.$$

Now set $y = \frac{1}{x}$,

$$= -\sum_{h=0}^{n} \frac{s_{n-h}(1^2, \ldots, (2n-1)^2)}{(2n)!} 2^{2h+1} \pi^{2n-2h} \int_0^1 \log^{2h+1} y \frac{\mathrm{d}y}{y^2+1}.$$

Doing a similar computation to formula (3.40) one obtains,

$$= \sum_{h=0}^{n} \frac{s_{n-h}(1^2, \ldots, (2n-1)^2)}{(2n)!} (2h+1)! 2^{2h+1} \pi^{2n-2h} \mathrm{L}(\chi_{-4}, 2h+2).$$

$\square$

Chapter 4

Connections with hyperbolic volumes

4.1 Introduction

Mahler measure has been found to be related to different geometrical-topological objects and invariants (such as geodesics, Alexander polynomials, etc). In this section we will focus our discussion on certain relations to hyperbolic volumes.

The connections between Mahler measure and volumes in the hyperbolic space are given in terms of the Bloch – Wigner dilogarithm. One of the amazing properties of this function is that $D(z)$ is equal to the volume of the ideal hyperbolic tetrahedron of shape z, with $\operatorname{Im} z > 0$ (denoted by $\Delta(z)$). In other words, a tetrahedron in $\mathbb{H}^3$ whose vertices are $0, 1, \infty, z$ (and in particular they belong to $\partial\mathbb{H}^3$). Recall that we use the model $\mathbb{H}^3 \cong \mathbb{C} \times \mathbb{R}_{>0} \cup \{\infty\}$ for the hyperbolic space. See Milnor [37], and Zagier [48].

Moreover, hyperbolic 3-manifolds can be decomposed into hyperbolic tetrahedra, and then their volumes can be expressed as a rational linear combination of $D(z)$ evaluated in algebraic arguments. This property may be combined with

relations between Mahler measures and volumes of certain manifolds crucially to prove certain identities of Mahler measures and special values of zeta functions over number fields (see Boyd and Rodriguez-Villegas, [12]).

4.2 A family of examples

The simplest example of a relation between Mahler measure and dilogarithm (and hence hyperbolic volumes) is given by Cassaigne and Maillot in [35] (formula (1.3) in the Introduction).

Boyd and Rodriguez-Villegas [11] studied the polynomials $R(x, y) = p(x)y - q(x)$. They found that when $p(x)$ and $q(x)$ are cyclotomic, $m(R)$ can be expressed as a sum of values of the Bloch – Wigner dilogarithm at certain algebraic arguments.

Another example was considered by Vandervelde [47]. He studied the Mahler measure of $axy + bx + cy + d$ and found a formula, which in the case of $a, b, c, d \in \mathbb{R}^*$, is very similar to the formula given by Cassaigne and Maillot. The Mahler measure (in the nontrivial case) turns out to be the sum of some logarithmic terms and two values of the dilogarithm, which can be interpreted as the hyperbolic volume of an ideal polyhedron that is built over a cyclic quadrilateral. The quadrilateral has sides of length $|a|$, $|b|$, $|c|$ and $|d|$.

Summarizing, we find:

- The zero set of Cassaigne – Maillot 's polynomial is described by

$$y = \frac{ax + b}{c},$$

  and its Mahler measure is the sum of some logarithms and the volume of an ideal polyhedron built over a triangle of sides $|a|$, $|b|$ and $|c|$.

- The zero set of Vandervelde 's polynomial is described by the rational function

$$y = \frac{bx + d}{ax + c},$$

and the Mahler measure of the corresponding polynomial is the sum of some logarithms and the volume of an ideal polyhedron built over a quadrilateral of sides $|a|$, $|b|$, $|c|$ and $|d|$.

It is natural then to ask what happens in more general cases, for instance, some of the examples given by Boyd and Rodriguez-Villegas. We have studied in [30] the Mahler measure of

$$R_t(x, y) = t(x^m - 1)y - (x^n - 1), \tag{4.1}$$

whose zero set is described by the rational function

$$y = \frac{x^{n-1} + \ldots + x + 1}{t(x^{m-1} + \ldots + x + 1)}. \tag{4.2}$$

We have found that the Mahler measure of the polynomial $R_t(x, y)$ has to do with volumes of ideal polyhedra built over polygons with n sides of length 1 and m sides of length $|t|$. In fact,

Theorem 19

$$\pi m(R_t(x, y)) = \pi \log |t| + \frac{2}{mn} \sum \epsilon_k \mathrm{Vol}(\pi^*(\mathcal{P}_k)) + \epsilon \sum_{k=1}^{N} (-1)^k \log |t| \arg \alpha_k \tag{4.3}$$

where $\epsilon, \epsilon_k = \pm 1$ and the $\mathcal{P}_k$ are all the admissible polygons of type (m, n).

Here R_t is the polynomial (4.1) and admissible polygons are, roughly speaking, all the possible cyclic polygons that can be built with n sides of length 1 and m sides of length $|t|$. We will give a precise definition later.

This formula with hyperbolic volumes is similar to certain formulas that occur for some cases of the A-polynomial of one-cusped manifolds. This situation was studied by Boyd [7,8], and Boyd and Rodriguez-Villegas [12].

4.2.1 A preliminary formula

Proposition 20 *Consider the polynomial*

$$R_t(x,y) = t(x^m - 1)y - (x^n - 1), \qquad t \in \mathbb{C}^* \qquad gcd(m,n) = 1.$$

Let $\alpha_1, \dots \alpha_N \in \mathbb{C}$ be the different roots (with odd multiplicity) of

$$Q(x) = \frac{x^n - 1}{x^m - 1} \cdot \frac{x^{-n} - 1}{x^{-m} - 1} - |t|^2$$

such that $|\alpha_k| = 1$, $\alpha_k \in \mathbb{H}^2 = \{z \in \mathbb{C} \,|\, \operatorname{Im} z > 0\}$, and they are ordered counter-clockwise starting from the one that is closest to 1. Then

$$\pi m(R_t(x,y)) = \pi \log|t| + \epsilon \sum_{k=1}^{N} (-1)^k \left(\frac{D({\alpha_k}^n)}{n} - \frac{D({\alpha_k}^m)}{m} + \log|t| \arg \alpha_k \right) \quad (4.4)$$

where $\epsilon = \pm 1$.

PROOF. This Proposition is very similar to Proposition 1 in [11] (when $t = 1$), but we prove it here so we can provide more details. We may suppose that $t \in \mathbb{R}_{>0}$, since multiplication of y by numbers of absolute value 1 does not affect the Mahler measure. By Jensen's formula,

$$\begin{aligned} 2\pi m(R_t(x,y)) - 2\pi \log t &= \frac{1}{\mathrm{i}} \int_{\mathbb{T}^1} \log^+ \left| \frac{1 - x^n}{t(1 - x^m)} \right| \frac{\mathrm{d}x}{x} && (4.5) \\ &= \frac{1}{\mathrm{i}} \sum_j \int_{\gamma_j} \log \left| \frac{1 - x^n}{t(1 - x^m)} \right| \frac{\mathrm{d}x}{x}. && (4.6) \end{aligned}$$

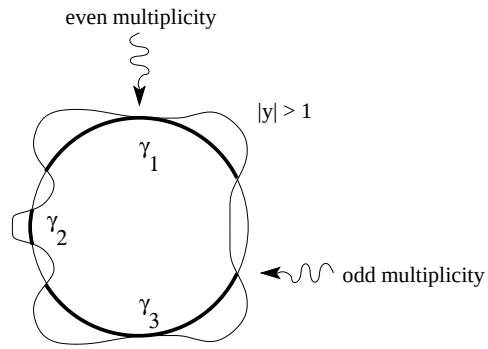

Figure 4.1: The arcs γ_i are the sets where $|y| \geq 1$. The extremes of these arcs occur in points where y crosses the unit circle.

Here γ_j are the arcs of the unit circle where $\left|\frac{1-x^n}{t(1-x^m)}\right| \geq 1$. The extreme points of the γ_j must be roots of $Q(x)$. It is easy to see that we only need to consider the roots of odd multiplicity, indeed, $y = \frac{1-x^n}{t(1-x^m)}$ crosses the unit circle only on those roots. See figure 4.1.

It is also clear that for each root of $Q(x)$, its inverse is also a root (in other words, Q is reciprocal), so the roots with absolute value one come in conjugated pairs, except, maybe, for 1 and -1. We need to analyze what happens with these two cases.

Case -1. Since m and n are coprime, they cannot be even at the same time and the only meaningful case in which -1 may be a root is when both are odd. In that case, $Q(-1) = 1 - t^2$, and $t = 1$. Studying the multiplicity of -1 in this case is equivalent to studying the multiplicity of -1 as a root of $Q_1(x) = x^m + x^{-m} - x^n - x^{-n}$. It is easy to see that $Q_1'(-1) = 0$ and $Q_1''(-1) \neq 0$, hence -1 is a root of multiplicity two.

Case 1. We have $Q(1) = \frac{n^2}{m^2} - t^2$. Hence 1 is root of $Q(x)$ if and only if $t = \frac{n}{m}$. As before, it is enough to study the parity of the multiplicity of 1 as a root of $Q_1(x) = m^2(x^n - 2 + x^{-n}) - n^2(x^m - 2 + x^{-m})$. Again we see that $Q_1'(1) = Q_1''(1) = Q_1'''(1) = 0$ but $Q_1^{(4)}(1) \neq 0$. Hence 1 is a root of even multiplicity.

Thus we do not need to take 1 or -1 into account and the extremes of the γ_j will lie in the α_k and their conjugates.

We have

$$\int_{\alpha_k}^{\alpha_{k+1}} \log|1-x^n|\frac{\mathrm{d}x}{\mathrm{i}x} = \frac{1}{n}\int_{\alpha_k^n}^{\alpha_{k+1}^n} \log|1-y|\frac{\mathrm{d}y}{\mathrm{i}y} = \frac{D({\alpha_k}^n) - D({\alpha_{k+1}}^n)}{n}$$

by equation(2.5). Using this in formula (4.6), and with the previous observations about the roots of Q, we obtain formula (4.4). $\square$

There is another way of performing this computation, which was suggested by Rodriguez-Villegas. The idea is to start with the case of $t = 1$ and obtain the general case as a deformation.

In order to do this, let us compute the initial case in a slightly different way. Recall that

$$R_1(x,y) = (x^m - 1)y - (x^n - 1).$$

Observe that

$$2\pi m(R_1(x,y)) = \int_{\gamma_1} \eta(x,y) \tag{4.7}$$

where $\gamma_1 = \cup\gamma_{1,i}$ is, as before, the set in the unit circle where $|y| \geq 1$ and η is differential 1-form which is defined basically in X, the smooth projective completion of the zero locus of R_1. For more details about η, see section 5.1 of this work. η is defined over X because R_1 is tempered (see [40]) and the tame symbols are trivial.

Moreover $\{x,y\} = 0$ in $K_2(X) \otimes \mathbb{Q}$ which implies that $\eta(x,y)$ is exact (see section 5.1). Using that $\eta(x, 1-x) = \mathrm{d}D(x)$, we recover the statement for $t = 1$:

$$\int_{\alpha_k}^{\alpha_{k+1}} \log|1-x^n|\frac{\mathrm{d}x}{\mathrm{i}x} = -\frac{1}{n}\int_{\alpha_k}^{\alpha_{k+1}} \eta(x^n, 1-x^n) = \frac{D({\alpha_k}^n) - D({\alpha_{k+1}}^n)}{n}.$$

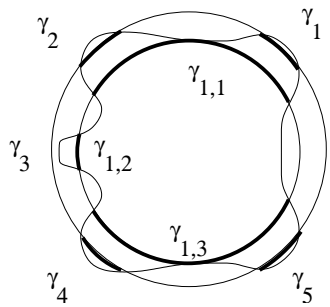

Figure 4.2: While the arcs γ_i are the sets where $|y| \geq 1$, the arcs γ_i are the sets where $|y| \geq t$.

Now in order to treat the general case, we write

$$y' = \frac{y}{t},$$

and

$$R_t(x, y') = R_1(x, y).$$

Then if

$$2\pi m(R_1) = \int_{\gamma_1} \eta(x, y),$$

where $\gamma_1 = \cup \gamma_{1,i}$, we also have

$$2\pi m(R_t) = 2\pi \log t + \int_{\gamma} \eta(x, y')$$

where $\gamma = \cup \gamma_j$. Now γ is the set of the circle where $|y'| \geq 1$, i.e., where $|y| \geq t$. See figure 4.2.

Observe that

$$\eta(x, y') = \eta(x, y) - \eta(x, t) = \eta(x, y) + \log t \ \mathrm{d} \arg x.$$

Then

$$2\pi m(R_t) = 2\pi \log t + \int_\gamma \eta(x,y) + \int_\gamma \log t \ \mathrm{d} \arg x$$

$$= 2\pi \log t + 2\,\epsilon \sum_{k=1}^{N} (-1)^k \left(\frac{D({\alpha_k}^n)}{n} - \frac{D({\alpha_k}^m)}{m} + \log t \ \arg \alpha_k \right).$$

□

The moral of this last procedure is that we can compute the Mahler measure of the polynomial with general coefficient t by altering the Mahler measure of the polynomial with $t = 1$. This concept of smooth deformation will appear in the main result of this section, when we interpret this formula as volumes in hyperbolic space.

We see that in order to compute the general Mahler measure, we need to integrate in a different path, i.e., in the set where $|y| \geq t$. There is no reason to think that this integration is harder to perform than the one over the set $|y| \geq 1$. However, determining the new arcs γ as functions of t might be hard. Nevertheless, this method should be useful to compute other examples, but we will not go on into this direction in this work.

In general, it seems difficult to interpret the intersection points (i.e., the starting and ending points for the arcs γ) geometrically. In a sense, the main point of this section is to show such an interpretation for the particular example that we have studied.

4.2.2 The main result

We will need some notation. The following definition is not standard.

Definition 21 *A cyclic plane polygon $\mathcal{P}$ will be called admissible of type (m,n) if the following conditions are true:*

- *$\mathcal{P}$ has $m+n$ sides, m of length t (with $t \in \mathbb{R}_{>0}$) and n of length 1.*

- *All the sides of length t wind around the center of the circle in the same direction, (say counterclockwise), and all the sides of length 1 wind around the center of the circle in the same direction, which may be opposite from the direction of the sides of length t (so they all wind counterclockwise or clockwise).*

In order to build such a polygon $\mathcal{P}$, we need to define two angles, η and τ, which are the central angles subtended by the chords of lengths 1 and t respectively. See figure 4.3. The polygon does not need to be convex or to wind exactly once around the center of the circle. Figure 4.3.a shows an ordinary convex polygon winding once. Observe that in this picture the two families of sides wind in the same direction. In figure 4.3.b, the polygon does not wind around the center. In this picture the two families of sides wind in opposite directions.

Let us remark that there are finitely many admissible polygons for given m, n and t. Given a polygon, the radius of the circle is fixed. Conversely, for each radius, there is at most one admissible polygon of type (m, n) that can be inscribed in the circle for t fixed. It is easy to see that the radius r and the parameter t satisfy an algebraic equation. So for given t there are only finitely many solutions r.

Given an admissible polygon $\mathcal{P}$, we think of $\mathcal{P} \subset \mathbb{C} \times \{0\} \subset S^2_\infty \cup \mathbb{H}^3$, then $\pi^*(\mathcal{P})$ denotes the ideal polyhedron whose vertices are ∞ and those of $\mathcal{P}$ (see figure 4.4).

Now, it makes sense to speak of the hyperbolic volume $\mathrm{Vol}(\pi^*(\mathcal{P}))$ (up to a sign). We consider $\mathcal{P}$ to be subdivided into $m+n$ triangles, as can be seen in figure 4.3, all of the triangles sharing a vertex at the center of the circle, and the opposite side to this vertex being one of the $m+n$ chords. Hence we get m isosceles triangles of basis t and n isosceles triangles of basis 1. We consider the orthoschemes over each of these triangles and the total volume will be the sum of the volumes of these tetrahedra, but we take the tetrahedra over the sides of length t to be negatively

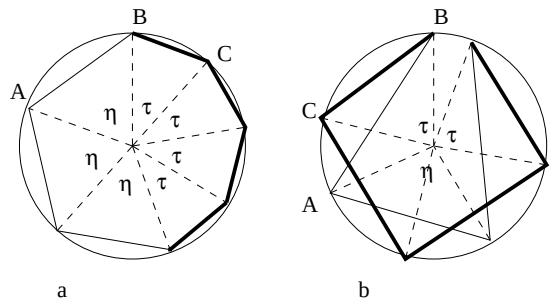

Figure 4.3: From now on, the bold segments indicate sides of length t, which are opposite to angles measuring τ. The ordinary segments indicate sides of length 1, opposite to angles measuring η. The circles in the pictures may seem to have the same radius, but that is not true. The radius is determined by the size of the polygon that is inscribed in the circle.

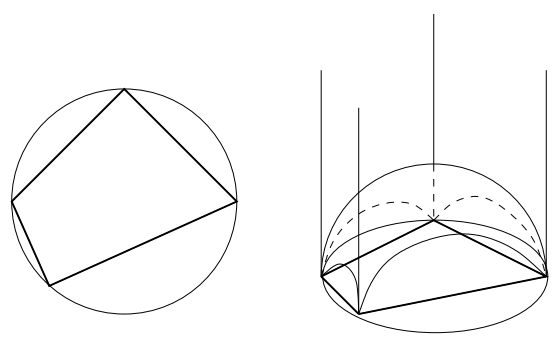

Figure 4.4: This picture shows an example of how to build the ideal polyhedron over an admissible polygon.

oriented if the two families of sides wind in opposite directions. Compare with the definition of dilogarithm of an oriented cyclic quadrilateral given by Vandervelde in [47].

We are now ready to state our main result.

Theorem 22 *The dilogarithm term of the Mahler measure in formula (4.4) is equal to the sum of the volumes of certain ideal polyhedra in the hyperbolic space $\mathbb{H}^3$:*

$$\epsilon \sum_{k=1}^{N} (-1)^k \left(\frac{D({\alpha_k}^n)}{n} - \frac{D({\alpha_k}^m)}{m} \right) = \frac{2}{mn} \sum \epsilon_k \mathrm{Vol}(\pi^*(\mathcal{P}_k)), \tag{4.8}$$

where $\epsilon_k = \pm 1$ and the $\mathcal{P}_k$ are all the admissible polygons of type (m, n).

PROOF. First, we will see that for each $\alpha = \alpha_k$, there exists an admissible polygon $\mathcal{P}$ as in the statement such that

$$\pm 2\mathrm{Vol}(\pi^*(\mathcal{P})) = mD(\alpha^n) - nD(\alpha^m). \tag{4.9}$$

Suppose $\alpha = \mathrm{e}^{\mathrm{i}\sigma}$ is such that

$$\sigma \in \left(\frac{k\pi}{m}, \frac{(k+1)\pi}{m} \right] \bigcap \left(\frac{l\pi}{n}, \frac{(l+1)\pi}{n} \right] \qquad 0 \leq k < m, \quad 0 \leq l < n. \tag{4.10}$$

We choose η and τ according to the rules given by the following tables:

k even	$\eta := m\sigma - k\pi$
k odd	$\eta := (k+1)\pi - m\sigma$

l even	$\tau := n\sigma - l\pi$
l odd	$\tau := (l+1)\pi - n\sigma$

This choice of η, τ is the only possible one that satisfies

$$\begin{aligned} \eta &\equiv \pm m\,\sigma \bmod 2\pi \\ \tau &\equiv \pm n\,\sigma \bmod 2\pi \end{aligned}$$

in addition to $0 < \eta \leq \pi$ and $0 < \tau \leq \pi$. The above congruences will guarantee the right arguments in the dilogarithm. This will be clearer later.

Also note that we cannot have $\eta = \tau = \pi$, since this would imply that

$$\frac{k+1}{m} = \frac{l+1}{n}$$

and this is possible only when $\sigma = \pi$, since m and n are coprime and $k < m$, $l < n$. But we have already seen that $\sigma < \pi$ in the proof of Proposition 20.

Let us prove that such a polygon with these angles and sides does exist. We have that $n\eta \pm m\tau = h\,2\pi$. Then, in order that the polygon can be inscribed in a circle, it is enough to verify the Sine Theorem. Take the triangle $\overset{\triangle}{ABC}$ in figure 4.3. The side $\overline{AB}$, of length 1, is opposite to an angle measuring $\frac{\eta}{2}$ or $\pi - \frac{\eta}{2}$. The side $\overline{BC}$ has length t and is opposite to an angle measuring $\frac{\tau}{2}$ or $\pi - \frac{\tau}{2}$. By the Sine Theorem,

$$\frac{1}{\sin\frac{\eta}{2}} = \frac{t}{\sin\frac{\tau}{2}}. \tag{4.11}$$

By looking at the table above, equality (4.11) becomes

$$\frac{1}{\left|\sin\frac{m\sigma}{2}\right|} = \frac{t}{\left|\sin\frac{n\sigma}{2}\right|}. \tag{4.12}$$

Squaring and using that $1 - \cos\omega = 2\sin^2\frac{\omega}{2}$,

$$2 - 2\cos n\sigma = t^2(2 - 2\cos m\sigma). \tag{4.13}$$

Since $\alpha = \mathrm{e}^{\mathrm{i}\sigma}$, we get

$$\left|\frac{\alpha^n - 1}{\alpha^m - 1}\right| = t. \tag{4.14}$$

Since this equation is the algebraic relation $Q(\alpha) = 0$ satisfied by α.

Hence, given σ, we can find η and τ, and we are able to construct the polygon $\mathcal{P}$. The equality $n\eta \pm m\tau = h\,2\pi$ indicates that the polygon winds h times around

the center of the circle. The possible sign "–" should be interpreted as a change in the direction we are going in the circle (from clockwise to counterclockwise or vice versa, as explained in the definition of admissible polygons). Note that the admissible polygon constructed in this way is unique, up to the rigid transformations on the plane and up to the order we choose for the angles η and τ as we wind around the center. There is no need to place all the η first and then all the τ. We do that for the sake of simplicity and coherence in the pictures.

Let us prove that the volume of the corresponding hyperbolic object is given by formula (4.9). As we mentioned above, the polygon is divided by $m+n$ triangles, all of them sharing one vertex at the center of the circle. The volume of the orthoscheme over each of these triangles depends only on the central angle ω and is equal to $\frac{D(\mathrm{e}^{\mathrm{i}\omega})}{2}$, according to Lemma 2, from Appendix, in Milnor's work [37]. We get the following

k even, l even	$\pm(nD(\mathrm{e}^{\mathrm{i}\eta}) - mD(\mathrm{e}^{\mathrm{i}\tau}))$
k even, l odd	$\pm(nD(\mathrm{e}^{\mathrm{i}\eta}) + mD(\mathrm{e}^{\mathrm{i}\tau}))$
k odd, l even	$\pm(nD(\mathrm{e}^{\mathrm{i}\eta}) + mD(\mathrm{e}^{\mathrm{i}\tau}))$
k odd, l odd	$\pm(nD(\mathrm{e}^{\mathrm{i}\eta}) - mD(\mathrm{e}^{\mathrm{i}\tau}))$

$$= \pm(nD(\alpha^m) - mD(\alpha^n)).$$

Now we will study the converse problem: given an admissible polygon $\mathcal{P}$, determined by η and τ (i.e., with n sides opposite to the angle η and m sides opposite to the angle τ, and $gcd(m,n)=1$). We want to find the α that corresponds to $\mathcal{P}$. The equation describing the polygon $\mathcal{P}$ is either $n\eta + m\tau = h\,2\pi$ or $n\eta - m\tau = h\,2\pi$. Without loss of generality, we may suppose that $\eta < \tau \leq \pi$ (and so, $0 < \eta < \pi$).

Let s be such that

$$s\,n \equiv h \bmod m \tag{4.15}$$

where s is chosen uniquely in such a way that

$$0 < \eta - s\,2\pi < m\,2\pi. \tag{4.16}$$

The condition $0 < \eta < \pi$ guarantees that $\eta - s\,2\pi \neq m\,\pi$. There are two cases:

$$0 < \eta - s\,2\pi < m\,\pi \quad \Rightarrow \quad \sigma := \frac{\eta - s\,2\pi}{m}$$

$$m\,\pi < \eta - s\,2\pi < m\,2\pi \quad \Rightarrow \quad \sigma := \frac{(s+m)\,2\pi - \eta}{m}$$

It is easy to see that these choices work, in the sense that $Q(\alpha) = 0$, $\alpha \in \mathbb{H}^2$ and $|\alpha| = 1$. We get $0 < \sigma < \pi$ in both cases, and $\eta \equiv \pm\, m\sigma (\bmod 2\pi)$, the sign being the one that we need to have the inequality $0 < \eta \leq \pi$, so we recover the α that produces η according to the table above we used to construct η. What happens with τ? We have $n\eta \pm m\tau = h\,2\pi$, then

$$\sigma = \frac{\eta - s\,2\pi}{m} \quad \Rightarrow \quad \pm\tau = -n\sigma + \frac{h - sn}{m}\,2\pi$$

$$\sigma = \frac{(s+m)\,2\pi - \eta}{m} \quad \Rightarrow \quad \pm\tau = n\sigma + \left(\frac{h - sn}{m} - n\right)2\pi$$

So that $\tau \equiv \pm\, n\sigma (\bmod 2\pi)$, and everything is consistent.

□

Let us observe that Theorem 22 gives another proof for the finiteness of the number of admissible polygons (since they all correspond to roots of Q).

4.2.3 Some particular cases

This example illustrates the situation of Theorem 22.

Example 23 *Consider the case $m = 2$, $n = 3$:*

$$y = \frac{x^3 - 1}{t(x^2 - 1)}. \tag{4.17}$$

The advantage of this particular case is that we can compute the actual values of α_k. In fact, clearing (cyclotomic) common factors,

$$R_t(x, y) = t(x + 1)y - (x^2 + x + 1).$$

We need $|y| = 1$, this is equivalent to

$$\frac{x^2 + x + 1}{t(x + 1)} \cdot \frac{x^{-2} + x^{-1} + 1}{t(x^{-1} + 1)} = 1.$$

The α_k are the roots (in $\mathbb{H}^2$, with absolute value 1) of the above equation, which can be expressed as

$$Q_1(x) = x^4 + (2 - t^2)x^3 + (3 - 2t^2)x^2 + (2 - t^2)x + 1 = 0.$$

As always, we can suppose that $t > 0$. We know that Q_1 is reciprocal. Because of that, we may write, (by simple inspection),

$$Q_1(x) = x^2 S(x + x^{-1}), \quad \text{where} \quad S(M) = M^2 + (2 - t^2)M + 1 - 2t^2. \tag{4.18}$$

The roots of Q_1 in the unit circle in $\mathbb{H}^2$ correspond to roots of S in the interval $[-2, 2]$ and vice versa. This is because if $\beta = \mathrm{e}^{\mathrm{i}\theta}$ is a root of Q_1, it corresponds to $M = \beta + \beta^{-1} = 2\cos\theta$, a root of S.

The roots of S are

$$M = \frac{t^2 - 2 \pm t\sqrt{t^2 + 4}}{2}. \tag{4.19}$$

We see that $M \in \mathbb{R}$ always. We also have the following:

$$\left|\frac{t^2-2-t\sqrt{t^2+4}}{2}\right| \leq 2 \qquad \forall\, 0<t$$
$$\left|\frac{t^2-2+t\sqrt{t^2+4}}{2}\right| \leq 2 \qquad \forall\, 0<t\leq \frac{3}{2} \tag{4.20}$$

We obtain either one or two pairs of roots of the form $\{\alpha, \bar{\alpha}\}$ according to the number of solutions for M. Indeed, $\operatorname{Re}\alpha = \frac{M}{2}$ if $M \in [-2, 2]$.

The situation is summarized by:

Observation 24 *Let α_1, α_2 be such that $\operatorname{Re}\alpha_1 = \frac{t^2-2-t\sqrt{t^2+4}}{4}$ for $0<t$, $\operatorname{Re}\alpha_2 = \frac{t^2-2+t\sqrt{t^2+4}}{4}$ for $0<t<\frac{3}{2}$, $|\alpha_i| = 1$ and $\operatorname{Im}\alpha_i > 0$. Then for $\sigma_i = \arg\alpha_i$, we have*

$$\pi > \sigma_1 > \frac{2\pi}{3} \tag{4.21}$$

$$\frac{2\pi}{3} > \sigma_2 > 0 \tag{4.22}$$

We will apply the procedure given in the proof of Theorem 22 in order to get the polygons. The case of α_1 is very simple. Because of inequality (4.21), $k = 1$ and $l = 2$ always, so $\eta = 2\pi - 2\sigma_1$ and $\tau = 3\sigma_1 - 2\pi$. Then $3\eta + 2\tau = 2\pi$. This corresponds to the convex pentagon which is inscribed in a circle (see figure 4.5).

The case of α_2 splits into three subcases according to the values of t, as shown in the following table.

Figure 4.6 illustrates the polygons corresponding to each of these subcases.

We would like to point out that in every case, the condition over t that we use to compute η and τ is the same as the geometrical condition that assures that we can build the corresponding polygon.

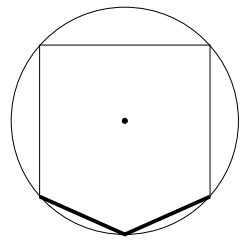

Figure 4.5: The case of α_1 corresponds to the ordinary convex polygon. Note that α_1 exists for any $t > 0$ and the same is true for the polygon.

Table 4.1: Case α_2

$0 < t < \frac{1}{\sqrt{2}}$	$\frac{2\pi}{3} > \sigma_2 > \frac{\pi}{2}$	$k = 1,\ l = 1$	$\eta = 2\pi - 2\sigma_2$ $\tau = 2\pi - 3\sigma_2$	$3\eta - 2\tau = 2\pi$
$\frac{1}{\sqrt{2}} < t < \frac{2}{\sqrt{3}}$	$\frac{\pi}{2} > \sigma_2 > \frac{\pi}{3}$	$k = 0,\ l = 1$	$\eta = 2\sigma_2$ $\tau = 2\pi - 3\sigma_2$	$3\eta + 2\tau = 4\pi$
$\frac{2}{\sqrt{3}} < t < \frac{3}{2}$	$\frac{\pi}{3} > \sigma_2 > 0$	$k = 0,\ l = 0$	$\eta = 2\sigma_2$ $\tau = 3\sigma_2$	$3\eta - 2\tau = 0$

The cases of $t = \frac{1}{\sqrt{2}}$ and $t = \frac{2}{\sqrt{3}}$ are limit cases and we get the transition pictures of figure 4.7.

Note that figure 4.7.d is indeed the intermediate figure between 4.6.a and 4.6.b and the same is true for 4.7.e, which is between 4.6.b and 4.6.c.

□

Example 25 *Consider the general case with $t = 1$:*

$$y = \frac{x^n - 1}{x^m - 1} \tag{4.23}$$

This is one particular case of the polynomials studied in [11].

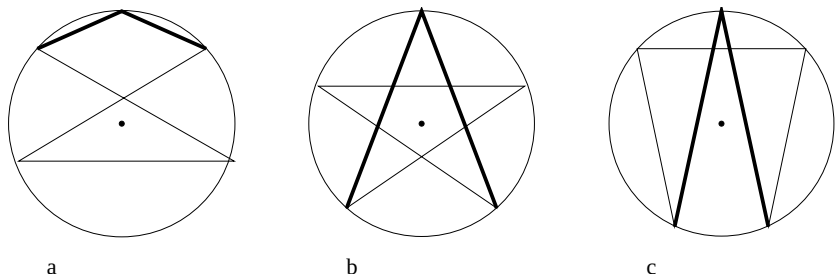

Figure 4.6: Case α_2: a) $0 < t < \frac{1}{\sqrt{2}}$ b) $\frac{1}{\sqrt{2}} < t < \frac{2}{\sqrt{3}}$ c) $\frac{2}{\sqrt{3}} < t < \frac{3}{2}$

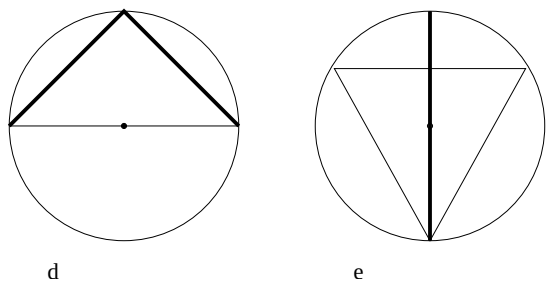

Figure 4.7: d) $t = \frac{1}{\sqrt{2}}$ e) $t = \frac{2}{\sqrt{3}}$

Without loss of generality, we can suppose $n > m$ (since the Mahler measure remains invariant under the transformation $y \to y^{-1}$). We need to look at

$$Q(x) = x^n(x^n - x^m - x^{-m} + x^{-n}) = (x^{m+n} - 1)(x^{n-m} - 1)$$

It is easy to see that the roots of Q are ζ_{m+n} and ζ_{n-m}, the $m+m$ and $n-m$ roots of the unity.

Getting the pictures is a delicate task, involving considerations such as the parity of m and n. We will content ourselves with studying the case $m = 1$. Then the roots of Q are ζ_{n+1} and ζ_{n-1}. We only need the roots in $\mathbb{H}^2$. In other words:

$$\sigma_j = \frac{2j\pi}{n+1} \quad \text{for} \quad j = 1, \ldots, \left[\frac{n}{2}\right]$$

$$\rho_j = \frac{2j\pi}{n-1} \quad \text{for} \quad j = 1, \ldots, \left[\frac{n}{2}\right] - 1$$

Since $m = 1$, $k = 0$ always. The choice for η and τ is given by the following table:

Table 4.2: η and τ

$\sigma_j = \frac{2j\pi}{n+1}$	$l = 2j - 1$	$\eta = \sigma_j$ $\tau = 2j\pi - n\sigma_j$ $(\eta = \tau = \frac{2j\pi}{n+1})$	$n\eta + \tau = 2j\pi$
$\rho_j = \frac{2j\pi}{n-1}$	$l = 2j$	$\eta = \rho_j$ $\tau = n\rho_j - 2j\pi$ $(\eta = \tau = \frac{2j\pi}{n-1})$	$n\eta - \tau = 2j\pi$

We can see that we get different kinds of stars, and that all the sides wind around the center of the circle in the same direction for the σ_j and that the two families of sides wind in different directions for the ρ_j. For this simple relation to hold, it is crucial that $m = 1$. The general case is much harder to describe.

□

4.2.4 Analogies with the case of A-polynomials

Boyd [9,10] and Boyd and Rodriguez-Villegas [12] found several examples where the Mahler measure of the A-polynomial of an orientable, complete, one-cusped, hyperbolic manifold M is related to the volume of the manifold. The A-polynomial is an invariant $A(x, y) \in \mathbb{Q}[x, x^{-1}, y, y^{-1}]$. Boyd and Rodriguez-Villegas found identities of the kind

$$\pi m(A) = \mathrm{Vol}(M).$$

Motivated by those works, we wonder if there is any relation with our situation. Consider the case of $t = 1$. Then the terms with $\log|t|$ vanish and formulas

(4.4) and (4.8) become

$$\pi m(R_1(x,y)) = \frac{2}{mn}\sum \epsilon_k \mathrm{Vol}(\pi^*(\mathcal{P}_k)). \tag{4.24}$$

Let us first mention a few words about A-polynomials. The A-polynomial is a certain invariant from the space of representations $\rho : \pi_1(M) \to SL_2(\mathbb{C})$, more precisely, it is the minimal, nontrivial algebraic relation between two parameters x and y which have to do with $\rho(\lambda)$ and $\rho(\mu)$, where $\lambda, \mu \in \pi_1(\partial M)$ are the longitude and the meridian of the boundary torus. For details about this definition see for instance, [15–17].

Assume the manifold M can be decomposed as a finite union of ideal tetrahedra:

$$M = \bigcup_{j=1}^{k} \Delta(z_j). \tag{4.25}$$

Then

$$\mathrm{Vol}(M) = \sum_{j=1}^{k} D(z_j). \tag{4.26}$$

For this collection of tetrahedra to be a triangulation of M, their parameters must satisfy certain equations, which may be classified in two sets:

- *Gluing equations*. These reflect the fact that the tetrahedra all fit well around each edge of the triangulation:

$$\prod_{i=1}^{k} z_i^{r_{j,i}}(1-z_i)^{r'_{j,i}} = \pm 1 \qquad \text{for} \quad j = 1, \ldots, k \tag{4.27}$$

  where $r_{j,i}$, $r'_{j,i}$ are some integers depending on M.

- *Completeness equations*. These have to do with the triangulation fitting prop-

erly at the cusps. If there is one cusp, there will be two of them:

$$\prod_{i=1}^{k} z_i^{l_i}(1-z_i)^{l_i'} = \pm 1 \tag{4.28}$$

$$\prod_{i=1}^{k} z_i^{m_i}(1-z_i)^{m_i'} = \pm 1 \tag{4.29}$$

where l_i, l_i', m_i, m_i' are some integers depending on M.

One possible solution to this system of equations is the geometric solution, when all the $\operatorname{Im} z_i > 0$. There are other possible solutions. For the geometric solution, $\sum_{i=1}^{k} D(z_i)$ is the volume of M. Following Boyd [9], $\sum_{i=1}^{k} D(z_i)$ will be called a pseudovolume of M for the other solutions. Hence, pseudovolumes correspond to sums where at least one of the terms is the dilogarithm of a number z with $\operatorname{Im}(z) \leq 0$. One way to understand this is that some of the tetrahedra may be degenerate (when $\operatorname{Im} z = 0$) or negatively oriented (when $\operatorname{Im} z < 0$). Boyd shows some examples with

$$\pi m(A) = \sum V_i$$

where $V_0 = \operatorname{Vol}(M)$ and the other V_i are pseudovolumes. At this point, the analogy of our situation with Boyd's results should be clear. We would like to say that R_1 is some sort of A-polynomial for some hyperbolic object.

Back to the construction of the A-polynomial, introduce "deformation parameters" x and y and replace the completeness relations by

$$\prod_{i=1}^{k} z_i^{l_i}(1-z_i)^{l_i'} = x^2 \tag{4.30}$$

$$\prod_{i=1}^{k} z_i^{m_i}(1-z_i)^{m_i'} = y^2 \tag{4.31}$$

For our purposes, the A-polynomial is obtained by eliminating $z_1, \ldots, z_k$ from the system formed by the gluing equations (4.27) and the equations (4.30) and (4.31). This construction is slightly different form the original definition, since it parameterizes representations in $PSL_2(\mathbb{C})$ instead of $SL_2(\mathbb{C})$. For a detailed discussion about the relationship between this definition and the original one, we refer the reader to Champanerkar's thesis [13]. See also Dunfield's Appendix to [12].

Following [39], we form the matrix

$$U = \begin{pmatrix} l_1 & \cdots & l_k & l'_1 & \cdots & l'_k \\ m_1 & \cdots & m_k & m'_1 & \cdots & m'_k \\ r_{1,1} & \cdots & r_{1,k} & r'_{1,1} & \cdots & r'_{1,k} \\ \vdots & \ddots & \vdots & \vdots & \ddots & \vdots \\ r_{k,1} & \cdots & r_{k,k} & r'_{k,1} & \cdots & r'_{k,k} \end{pmatrix} \tag{4.32}$$

One of the main results in [39] is

Theorem 26 *(Neumann – Zagier)*

$$U J_{2k} U^t = 2 \begin{pmatrix} J_2 & 0 \\ 0 & 0 \end{pmatrix} \tag{4.33}$$

where

$$J_{2p} = \begin{pmatrix} 0 & I_p \\ -I_p & 0 \end{pmatrix}$$

Back to our problem, we recall that each term in the right side of equation (4.24) corresponds to the volume of an orthoscheme that is built over an admissible polygon. Each of these polygons is naturally divided into $m + n$ triangles. This division yields a division of the corresponding orthoscheme in $m + n$ hyperbolic tetrahedra. These tetrahedra are not ideal. However, we can redo the whole process by pushing this common vertex that lies over the center of the circle to the base

plane $\mathbb{C} \times \{0\}$ and all the tetrahedra become ideal. The new orthoscheme will be denoted by $\pi^*(\mathcal{P}'_k)$. The volumes of the tetrahedra get multiplied by 2. Formula (4.24) becomes

$$\pi m(R_1(x,y)) = \frac{1}{mn} \sum \epsilon_k \mathrm{Vol}(\pi^*(\mathcal{P}'_k)) \tag{4.34}$$

Inspired by the above situation, it is natural for us to take these tetrahedra as a triangulation for our hyperbolic object. So we would like to choose the shape parameters to be $w = \mathrm{e}^{\mathrm{i}\eta}$ and $z = \mathrm{e}^{\mathrm{i}\tau}$. Here we actually mean that we have $k = m+n$ tetrahedra, m of them have parameter w and n of them have parameter z. We choose the parameters to be $w_1, \ldots, w_m$ and $z_1, \ldots, z_n$ and impose the additional condition that $w_1 = \ldots = w_m$ and $z_1 = \ldots = z_n$. The fact that the tetrahedra wind around the axis through the center of the circle which is orthogonal to the base plane $\mathbb{C} \times \{0\}$, can be expressed by the gluing equation $w_1 \ldots w_m z_1 \ldots z_n = 1$. Further, we need two additional completeness equations, which will be chosen ad hoc for the final result to fit our needs.

It is easy to see that the system

$$\left\{ \begin{array}{rcl} w_1^{\alpha} z_1^{\beta} & = & x^2 \\ w_1^{-mn(m+n)\alpha} z_1^{-mn(m+n)\beta} (1-w_1)^{2n} \ldots (1-w_m)^{2n} & & \\ \cdot (1-z_1)^{-2m} \ldots (1-z_n)^{-2m} & = & y^2 \\ w_1 \ldots w_m z_1 \ldots z_n & = & 1 \\ w_1 w_2^{-1} & = & 1 \\ \vdots & & \\ w_1 w_m^{-1} & = & 1 \\ z_1 z_2^{-1} & = & 1 \\ \vdots & & \\ z_1 z_n^{-1} & = & 1 \end{array} \right. \tag{4.35}$$

for $n\alpha - m\beta = 1$, satisfies the conditions of Theorem 26. The system reduces easily to

$$\begin{cases} w^{\alpha} z^{\beta} &= x^2 \\ w^{-mn(m+n)\alpha} z^{-mn(m+n)\beta} \left(\frac{1-w}{1-z}\right)^{2mn} &= y^2 \\ w^m z^n &= 1 \end{cases} \tag{4.36}$$

Replace the first equation by its $(n^2 - m^2)$th-power,

$$\begin{cases} w^n z^m &= x^{2(n^2-m^2)} \\ \left(\frac{z}{w}\right)^{mn} \left(\frac{1-w}{1-z}\right)^{2mn} &= y^2 \\ w^m z^n &= 1 \end{cases} \tag{4.37}$$

Eliminate x and y. One of the branches (the one with $w = x^{2n}, z = x^{-2m}$), is

$$y^2 = \left(\frac{x^n - x^{-n}}{x^m - x^{-m}}\right)^{2mn} \tag{4.38}$$

Consider

$$\tilde{R}(x, y) = (x^m - x^{-m})^{mn} y - (x^n - x^{-n})^{mn}. \tag{4.39}$$

(We have chosen a particular branch again). It is easy to see that

$$mn \cdot m(R_1) = m(\tilde{R}).$$

Hence

$$\pi m(\tilde{R}(x, y)) = \sum \epsilon_k \mathrm{Vol}(\pi^*(\mathcal{P}'_k)). \tag{4.40}$$

We can think of $\tilde{R}$ as the A-polynomial of some hyperbolic object that has a triangulation that can be described by the system of equations (4.35). We do not expect this object to be a manifold. For instance, this object cannot be the complement of a knot, since the A-polynomial of a knot has a number of properties

such as being reciprocal ([16, 17]).

Also note that the objects whose volumes we are adding correspond to solutions of the system of equations (4.37) with $x = y = 1$, in other words, we are able to recover the α_k for the case of $t = 1$. In fact, we need to solve the system

$$\begin{cases} w^n z^m &= 1 \\ \left(\frac{z}{w}\right)^{mn} \left(\frac{1-w}{1-z}\right)^{2mn} &= 1 \\ w^m z^n &= 1 \end{cases} \tag{4.41}$$

From the third equation we write $w = u^n$, $z = u^{-m}$. Substituting this into the first equation, we see that $u^{n^2-m^2} = 1$. From this we conclude that $|w| = |z| = 1$. Now look at the second equation, which says that

$$\left(\frac{(1-w)(1-w^{-1})}{(1-z)(1-z^{-1})}\right)^{mn} = 1.$$

If we take into account that $|w| = |z| = 1$, we see that we are actually computing the mn – power of an absolute value, then

$$\frac{(1-w)(1-w^{-1})}{(1-z)(1-z^{-1})} = 1.$$

Concluding that the only possible solutions are $m + n$ and $|n - m|$ - roots of unity is now an easy exercise.

Note that we generally get more than one "geometric solution", in the sense that there is more than one solution where all the parameters lie in $\mathbb{H}^2$. For instance, in the case of $(m, n) = (2, 3)$, we get the two solutions described in the example.

Let us also observe that, if X is the smooth projective completion of the curve defined by $\tilde{R}(x, y) = 0$, then $\{x, y\} = 0$ in $K_2(X) \otimes \mathbb{Q}$. In fact, in $\bigwedge^2(\mathbb{C}(X)^*) \otimes \mathbb{Q}$

(see section 5.1),

$$x \wedge y = mn\, x \wedge (x^n - x^{-n}) - mn\, x \wedge (x^m - x^{-m})$$

$$= mx^n \wedge (x^{2n} - 1) + nx^{-m} \wedge (1 - x^{-2m}).$$

Now use that $w = x^{2n}$ and $z = x^{-2m}$ up to torsion,

$$= \frac{m}{2} w \wedge (1 - w) + \frac{n}{2} z \wedge (1 - z).$$

The identity above reflects the concept of triangulation as it appears in [12].

Finally, we should point out that we could have done the whole process starting from the family of polynomials $\tilde{R}_t(x, y) = t(x^m - x^{-m})^{mn} y - (x^n - x^{-n})^{mn}$. The reason we started with the polynomials $R_t(x, y) = t(x^m - 1)y - (x^n - 1)$ is that they are easier to analyze and that they seem a natural choice in order to generalize previous works as it is explained in the introduction.

Chapter 5

An algebraic integration for Mahler measure

5.1 The two-variable case

In order to understand the formulas for the two variables polynomials, Rodriguez-Villegas [40] has carried out the explicit construction and the details of Deninger's work for two variables. This was later continued by Boyd and Rodriguez-Villegas [11], [12]. We will follow [40] in this section.

Given a smooth projective curve C and x, y rational functions ($x, y \in \mathbb{C}(C)^*$), define

$$\eta(x, y) = \log|x| \, \mathrm{d}\arg y - \log|y| \, \mathrm{d}\arg x. \tag{5.1}$$

Here

$$\mathrm{d}\arg x = \mathrm{Im}\left(\frac{\mathrm{d}x}{x}\right) \tag{5.2}$$

is well defined in $\mathbb{C}$ in spite of the fact that arg is not. η is a 1-form in $C \setminus Z$, where

Z is the set of zeros and poles of x and y. It is also closed, because of the identity

$$\mathrm{d}\eta(x,y) = \mathrm{Im}\left(\frac{\mathrm{d}x}{x} \wedge \frac{\mathrm{d}y}{y}\right) = 0.$$

Let $P \in \mathbb{C}[x,y]$. Then we may write

$$P(x,y) = a_d(x)y^d + \ldots + a_0(x)$$

$$P(x,y) = a_d(x)\prod_{n=1}^{d}(y - \alpha_n(x)).$$

By Jensen's formula,

$$m(P) = m(a_d) + \frac{1}{2\pi \mathrm{i}}\sum_{n=1}^{d}\int_{\mathbb{T}^1}\log^+|\alpha_n(x)|\frac{\mathrm{d}x}{x} = m(P^*) - \frac{1}{2\pi}\int_\gamma \eta(x,y). \tag{5.3}$$

Here $P^* = a_d(x)$, and γ is the union of paths in $C = \{P(x,y) = 0\}$ where $|x| = 1$ and $|y| \geq 1$. Also note that $\partial\gamma = \{P(x,y) = 0\} \cap \{|x| = |y| = 1\}$.

Now, if we would like to be able to perform this computation, we wish to arrive to one of these two situations:

1. η is exact, and $\partial\gamma \neq 0$. In this case we can integrate using Stokes' Theorem.

2. η is not exact and $\partial\gamma = 0$. In this case we can compute the integral by using the Residue Theorem.

Under what conditions is η exact? In fact, Rodriguez-Villegas proved that

Theorem 27

$$\eta(x, 1-x) = \mathrm{d}D(x). \tag{5.4}$$

We will associate η with an element in $H^1(C \setminus Z, \mathbb{R})$ in the following way. Given $[\gamma] \in H_1(C \setminus Z, \mathbb{Z})$,

$$[\gamma] \to \int_\gamma \eta(x,y) \tag{5.5}$$

(we identify $H^1(C \setminus Z, \mathbb{R})$ with $H_1(C \setminus Z, \mathbb{Z})')$.

Under certain conditions (when the tame symbols $(x, y)_w$ are trivial, see [40]) this map can be extended to C and we may think of η as a closed form in C.

Note the following:

Theorem 28 *η satisfies the following properties*

1. $\eta(x, y) = -\eta(y, x)$.
2. $\eta(x_1 x_2, y) = \eta(x_1, y) + \eta(x_2, y)$.
3. $\eta(x, 1 - x) = 0$ *in* $H^1(C, \mathbb{R})$.

As a consequence, η is a symbol, and can be factored through $K_2(\mathbb{C}(C))$ (by Matsumoto's Theorem). Hence we can guarantee that $\eta(x, y)$ is exact by having $\{x, y\}$ is trivial in $K_2(\mathbb{C}(C)) \otimes \mathbb{Q}$. We consider the tensorial product with $\mathbb{Q}$ in order to eliminate the roots of unity, since η is trivial on them.

At this point we have a function

$$K_2(\mathbb{Q}(C)) \longrightarrow H^1(C, \mathbb{R}).$$

The fact that we are able to tensor by $\mathbb{Q}$ implies that we can view $K_2(C)$ inside $K_2(\mathbb{Q}(C))$ and we get a function

$$K_2(C) \longrightarrow H^1(C, \mathbb{R})$$

which is essentially the regulator on the curve C (see section 5.7).

5.1.1 The case when η is exact

In general, for η to be exact we need that the symbol $\{x, y\}$ is trivial in $K_2(\mathbb{Q}(C))$. In other words, we need an equality like

$$x \wedge y = \sum_j r_j z_j \wedge (1 - z_j) \tag{5.6}$$

in $\bigwedge^2(\mathbb{C}(C)^*) \otimes \mathbb{Q}$.

In fact, if condition (5.6) is satisfied, we obtain

$$\eta(x, y) = \mathrm{d}\left(\sum_j r_j D(z_j)\right) = \mathrm{d}D\left(\sum_j r_j [z_j]\right). \tag{5.7}$$

Let $\gamma \subset C$ be such that

$$\partial\gamma = \sum_k \epsilon_k [w_k] \quad \epsilon_k = \pm 1$$

where $w_k \in C(\mathbb{C})$, $|x(w_k)| = |y(w_k)| = 1$. Then

$$2\pi m(P) = D(\xi) \qquad \text{for} \quad \xi = \sum_k \sum_j r_j [z_j(w_k)].$$

5.1.2 An example for the two-variable case

To be concrete, we are going to show one example for the exact case in two variables. Consider Smyth's polynomial:

$$\pi m(x + y - 1) = \frac{3\sqrt{3}}{4} \mathrm{L}(\chi_{-3}, 2).$$

For this case,

$$x \wedge y = x \wedge (1 - x).$$

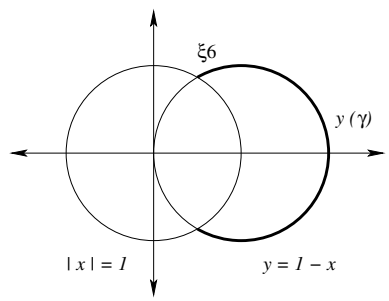

Figure 5.1: Integration path for $x + y - 1$

Then

$$2\pi m(P) = -\int_\gamma \eta(x,y) = -\int_\gamma \eta(x, 1-x) = -D(\partial\gamma)$$

Here

$$\gamma = \{(x,y) \,|\, |x| = 1, |1-x| \geq 1\} = \{(\mathrm{e}^{2\pi \mathrm{i}\theta}, 1 - \mathrm{e}^{2\pi\mathrm{i}\theta}) \,|\, \theta \in [1/6\,; 5/6]\}.$$

Figure 5.1.2 shows the integration path γ.

Then $\partial\gamma = [\bar{\xi}_6] - [\xi_6]$ (where $\xi_6 = \frac{1+\sqrt{3}\mathrm{i}}{2}$) and we obtain

$$2\pi m(x+y-1) = D(\xi_6) - D(\bar{\xi}_6) = 2D(\xi_6) = \frac{3\sqrt{3}}{2}\mathrm{L}(\chi_{-3}, 2).$$

5.2 The three-variable case

Our goal is to extend this situation to three variables. Let $P \in \mathbb{C}[x,y,z]$. We will take

$$\eta(x,y,z) = \log|x| \left(\frac{1}{3}\,\mathrm{d}\log|y|\,\mathrm{d}\log|z| - \,\mathrm{d}\arg y\,\mathrm{d}\arg z\right)$$

$$+ \log|y| \left(\frac{1}{3}\,\mathrm{d}\log|z|\,\mathrm{d}\log|x| - \,\mathrm{d}\arg z\,\mathrm{d}\arg x\right)$$

$$+\log|z|\left(\frac{1}{3}\,\mathrm{d}\log|x|\,\mathrm{d}\log|y|-\ \mathrm{d}\arg x\,\mathrm{d}\arg y\right). \tag{5.8}$$

The differential form is defined in the surface $S=\{P(x,y,z)=0\}$ minus the set Z of poles and zeros of x,y and z.

Observe that η verifies

$$\mathrm{d}\eta(x,y,z)=\mathrm{Re}\left(\frac{\mathrm{d}x}{x}\wedge\frac{\mathrm{d}y}{y}\wedge\frac{\mathrm{d}z}{z}\right)$$

thus, it is closed in the subset of $S\setminus Z$ where it is defined.

We can express the Mahler measure of P as

$$m(P)=m(P^*)-\frac{1}{(2\pi)^2}\int_\Gamma\eta(x,y,z). \tag{5.9}$$

Where P^* follows the previous notation, being the principal coefficient of the polynomial $P\in\mathbb{C}[x,y][z]$ and

$$\Gamma=\{P(x,y,z)=0\}\cap\{|x|=|y|=1,|z|\geq 1\}.$$

Typically, integral (5.9) can be computed if we are in one of the two ideal situations that we described before. Either the form $\eta(x,y,z)$ is not exact and the set Γ consists of closed subsets and the integral is computed by residues, or the form $\eta(x,y,z)$ is exact and the set Γ has nontrivial boundaries, so Stokes' Theorem is used. The first case leads to instances of Beilinson's conjectures and produces special values of L-functions of surfaces. In the second case we need that $\eta(x,y,z)$ is exact. We are going to concentrate in this case.

We are integrating on a subset of the surface S. In order for the element in the cohomology to be defined everywhere in the surface S, we need the residues to be zero. This situation is fulfilled when the tame symbols are zero. This condition will not be a problem for us because when η is exact the tame symbols are zero.

As in the two-variable case, we need to look for conditions for η to be exact. Indeed,

Proposition 29

$$\eta(x, 1-x, y) = \mathrm{d}\,\omega(x, y) \tag{5.10}$$

where

$$\omega(x, y) = -D(x)\,\mathrm{d}\arg y + \frac{1}{3}\log|y|(\log|1-x|\,\mathrm{d}\log|x| - \log|x|\,\mathrm{d}\log|1-x|). \tag{5.11}$$

PROOF. We have,

$$\eta(x, 1-x, y) = \log|x|\left(\frac{1}{3}\,\mathrm{d}\log|1-x|\,\mathrm{d}\log|y| - \mathrm{d}\arg(1-x)\,\mathrm{d}\arg y\right)$$

$$+\log|1-x|\left(\frac{1}{3}\,\mathrm{d}\log|y|\,\mathrm{d}\log|x| - \mathrm{d}\arg y\,\mathrm{d}\arg x\right)$$

$$+\log|y|\left(\frac{1}{3}\,\mathrm{d}\log|x|\,\mathrm{d}\log|1-x| - \mathrm{d}\arg x\,\mathrm{d}\arg(1-x)\right).$$

But

$$\frac{\mathrm{d}x}{x} \wedge \frac{\mathrm{d}(1-x)}{1-x} = 0 \;\Rightarrow\; \mathrm{d}\log|x|\,\mathrm{d}\log|1-x| = \mathrm{d}\arg x\,\mathrm{d}\arg(1-x) \tag{5.12}$$

because the real part has to be zero.

Therefore,

$$\eta(x, 1-x, y) = -\eta(x, 1-x)\,\mathrm{d}\arg y + \frac{1}{3}\,\mathrm{d}\log|y|(\log|1-x|\,\mathrm{d}\log|x| - \log|x|\,\mathrm{d}\log|1-x|)$$

$$-\frac{2}{3}\log|y|\,\mathrm{d}\log|x|\,\mathrm{d}\log|1-x|$$

and it is easy to see that this form is $\mathrm{d}\omega(x, y)$. $\square$

Thus, in order to apply Stokes's Theorem, we need to request that $\{x, y, z\}$

is trivial in $K_3^M(\mathbb{C}(S))$ for η to be exact. An equivalent way of expressing this condition is that

$$x \wedge y \wedge z = \sum r_i x_i \wedge (1 - x_i) \wedge y_i \tag{5.13}$$

in $\bigwedge^3(\mathbb{C}(S)^*) \otimes \mathbb{Q}$.

In this case,

$$\int_\Gamma \eta(x, y, z) = \sum r_i \int_\Gamma \eta(x_i, 1 - x_i, y_i) = \sum r_i \int_{\partial\Gamma} \omega(x_i, y_i).$$

Where

$$\partial\Gamma = \{P(x, y, z) = 0\} \cap \{|x| = |y| = |z| = 1\}.$$

There is a "better" way to understand this set. Namely, if $P \in \mathbb{R}[x, y, z]$, then

$$P(x, y, z) = P(\bar{x}, \bar{y}, \bar{z}).$$

This property, together with the condition $|x| = |y| = |z| = 1$ allow us to write

$$\partial\Gamma = \{P(x, y, z) = P(x^{-1}, y^{-1}, z^{-1}) = 0\} \cap \{|x| = |y| = 1\}.$$

(This idea was proposed by Maillot). Observe that we are integrating now on a path $\{|x| = |y| = 1\}$ inside the curve

$$C = \{P(x, y, z) = P(x^{-1}, y^{-1}, z^{-1}) = 0\}.$$

In order to easily compute

$$\int_{\partial\Gamma} \omega(x, y)$$

we have again the two possibilities that we had before. We are going to concentrate,

as usual, in the case when $\omega(x,y)$ is exact.

The differential form ω is defined in this new curve C. As before, to be sure that it is defined everywhere, we need to ask that the residues are trivial and that is guarantee by the triviality of tame symbols. This last condition is satisfied if ω is exact. Indeed, we have changed our ambient variety, and we now wonder when is ω exact in C (ω is not exact in S since that would imply that η is zero).

Fortunately we have

Proposition 30

$$\omega(x,x) = \mathrm{d}\mathcal{L}_3(x). \tag{5.14}$$

PROOF. Note that

$$\mathcal{L}_3(x) = \mathrm{Re}\left(\mathrm{Li}_3(x) - \log|x|\mathrm{Li}_2(x) + \frac{1}{3}\log^2|x|\mathrm{Li}_1(x)\right),$$

Now we apply equation (2.8) to get

$$\mathrm{d}\mathcal{L}_3(x) = \mathrm{Re}\left(\mathrm{Li}_2(x)\frac{\mathrm{d}x}{x} - \mathrm{d}\log|x|\mathrm{Li}_2(x) - \log|x|\mathrm{Li}_1(x)\frac{\mathrm{d}x}{x}\right.$$

$$\left. + \frac{2}{3}\log|x|\,\mathrm{d}\log|x|\mathrm{Li}_1(x) + \frac{1}{3}\log^2|x|\frac{\mathrm{d}x}{1-x}\right)$$

$$= \mathrm{Re}(\mathrm{Li}_2(x))\,\mathrm{d}\log|x| - \mathrm{Im}(\mathrm{Li}_2(x))\,\mathrm{d}\arg x - \mathrm{d}\log|x|\,\mathrm{Re}(\mathrm{Li}_2(x))$$

$$+ \log|x|\log|1-x|\,\mathrm{d}\log|x| - \log|x|\arg(1-x)\,\mathrm{d}\arg x$$

$$-\frac{2}{3}\log|x|\,\mathrm{d}\log|x|\log|1-x| - \frac{1}{3}\log^2|x|\,\mathrm{d}\log|1-x|$$

and it is clear that this is equal to $\omega(x,x)$. $\square$

The condition for ω to be exact is not as easily established as in the precedent cases because ω is not multiplicative in the first variable. In fact, the first variable

behaves as the dilogarithm, in other words, the transformations are ruled by the five-term relation[1]. We may express the condition we need as:

$$[x]_2 \otimes y = \sum r_i [x_i]_2 \otimes x_i \tag{5.15}$$

in $(B_2(\mathbb{C}(C)) \otimes \mathbb{C}(C)^*)_{\mathbb{Q}}$. The precise definition for this algebraic object will be given section 5.3.2, but the idea is that we quotient by the algebraic relations of the dilogarithm.

Then we have as before:

$$\int_\gamma \omega(x,y) = \sum r_i \, \mathcal{L}_3(x_i)|_{\partial\gamma} \, . \tag{5.16}$$

5.3 The K-theoretic point of view

We would like to explain what condition (5.15) means and how it may be read in terms of K-theory (in analogy to the relations of conditions (5.6) and (5.13) to K-theory). Eventually we would like to generalize the whole process for n-variables.

5.3.1 Introduction to K-theory

We will first review some definitions from K-theory and Borel's Theorem.

Milnor's K-theory

Given a field F, Milnor [36] considers

$$K_n^M(F) := \bigwedge^n F^* \, / \langle (1-x_1) \wedge x_1 \wedge x_2 \wedge \ldots \wedge x_{n-1}, x_i \in F^* \rangle$$

Because of Matsumoto's Theorem, this definition coincides for $n = 2$ with the original definition of $K_2(F)$.

[1]Indeed all the identities of the dilogarithm can be deduced from the five-term relation.

Quillen's K-theory

Given a group G, its classifying topological space BG satisfies $\pi_1(BG) = G$ and $\pi_n(BG) = 0$ for $n > 1$ (and $H_n(G) := H_n(BG)$). Now for a given ring R, consider

$$G = GL(R) = \cup_{n\geq 1} GL_n(R).$$

One extends BG to BG^+ by adjoining certain 2-cells and 3-cells, such that

$$\pi_1(BG^+) = G^{ab} = K_1(R) \quad \text{and} \quad H_n(BG^+) = H_n(BG) = H_n(G).$$

This construction is know as "+-construction" and it was made by Quillen who defined the K-groups as

$$K_m(R) := \pi_m(BGL(R)^+), \quad m \geq 1.$$

Borel's Theorem

Let F be a number field. Borel [6] showed that the higher K-groups modulo torsion are free abelian of rank given by

$$\dim(K_n(F) \otimes \mathbb{Q}) = \begin{cases} 0 & n \geq 2 \,\text{even} \\ n_{\mp} & n > 1 \,\text{odd} \end{cases}$$

where $\mp = (-1)^{m-1}$, $n_+ = r_1 + r_2$ and $n_- = r_2$ (r_1 is the number of real places and r_2 is the number of pairs of complex places). Moreover, for each $m > 1$ there is a map

$$\text{reg}_m : K_{2m-1}(\mathbb{C}) \to \mathbb{R},$$

which is $(-1)^{m-1}$-invariant with respect to complex conjugation and the composite map

$$\mathrm{reg}_{m,F} : K_{2m-1}(F) \to (K_{2m-1}(\mathbb{R}))^{r_1} \times (K_{2m-1}(\mathbb{C}))^{r_2} \xrightarrow{\mathrm{reg}_m} \mathbb{R}^{n_\mp}$$

maps $K_{2m-1}(F)/\text{torsion}$ isomorphically onto a cocompact lattice whose covolume is a rational multiple of

$$\frac{|D_F|^{\frac{1}{2}}\zeta_F(m)}{\pi^{mn_\pm}}.$$

5.3.2 The polylogarithm complexes

We follow Goncharov, [21, 22].

Given a field F, define subgroups $R_i(F) \subset \mathbb{Z}[\mathbb{P}^1_F]$ as

$$\begin{aligned} R_1(F) &:= [x] + [y] - [xy] \\ R_2(F) &:= [x] + [y] + [1-xy] + \left[\frac{1-x}{1-xy}\right] + \left[\frac{1-y}{1-xy}\right] \\ R_3(F) &:= \quad \text{equation generalizing Spence – Kummer relation (2.7)} \end{aligned} \tag{5.17}$$

The particular form of the functional equation $R_3(F)$ will not be relevant for us. It suffices to say that, $R_3(F)$ is conjectured to generate all the functional equations of the trilogarithm In other words, $R_3(F)$ is conjectured to play the same role as the five-term relation $R_2(F)$ for the dilogarithm.

Observe that $R_2(F)$ includes the relation $[x] + [x^{-1}]$, by setting $y = x^{-1}$ in the five-term relation, $[x] + [1-x]$, by setting $y = 1$, and $2[x] + 2[-x] = [x^2]$, by setting $y = -x$ (this is just an illustration of the general fact that the functional equations of the dilogarithm are all consequences of the five-term relation). The same is true for $R_3(F)$ which includes a bunch of identities by specializing in the Spence – Kummer relation (2.7):

- $x = y$ implies $4[x] + 4[-x] - [x^2]$

- $x = 1$ implies $[y] - [y^{-1}]$
- $x = 0$ implies $[y] + [1-y] + [1-y^{-1}] - [1]$

Define

$$B_i(F) := \mathbb{Z}[\mathbb{P}^1_F] / \langle R_i(F), \{0\}, \{\infty\} \rangle \,. \tag{5.18}$$

The idea is that $B_i(F)$ is where P_i naturally acts (for $i > 1$). We have the following complexes:

$$\begin{aligned} B_F(3) &: B_3(F) \xrightarrow{\delta_1^3} B_2(F) \otimes F^* \xrightarrow{\delta_2^3} \wedge^3 F^* \\ B_F(2) &: B_2(F) \xrightarrow{\delta_1^2} \wedge^2 F^* \\ B_F(1) &: F^* \end{aligned}$$

(Here $B_i(F)$ is placed in degree 1).

$$\delta_1^3([x]_3) = [x]_2 \otimes x \qquad \delta_2^3([x]_2 \otimes y) = x \wedge (1-x) \wedge y \qquad \delta_1^2([x]_2) = x \wedge (1-x)$$

The cohomology of the above complexes can be expressed in terms of pieces of K-theory groups.

Proposition 31 *We have the following*

1.

$$H^1(B_F(1)) \cong F^* = K_1(F) \tag{5.19}$$

2.

$$H^1(B_F(2))_{\mathbb{Q}} \cong K_3^{\mathrm{ind}}(F)_{\mathbb{Q}} \tag{5.20}$$

3.

$$H^2(B_F(2)) \cong K_2(F) \tag{5.21}$$

4.

$$H^3(B_F(3)) \cong K_3^M(F) \tag{5.22}$$

Here

$$K_3^{\mathrm{ind}}(F) := \operatorname{coker}\left(K_3^M(F) \to K_3(F)\right).$$

The first assertion is just the definition, the second one was proved by Suslin. The third one is Matsumoto's theorem and the last one corresponds to the definition Milnor's K-theory.

We still may say something about the cohomology in the other places of $B_F(3)$. Recall that the diagonal map $\Delta : G \to G \times G$ provides a homomorphism $\Delta_* : H_n(G) \to H_n(G \times G)$, then

$$\operatorname{Prim} H_n(G) := \{x \in H_n(G) \mid \Delta_*(x) = x \otimes 1 + 1 \otimes x\}.$$

By Milnor – Moore theorem,

$$K_n(F)_{\mathbb{Q}} = \operatorname{Prim} H_n(GL(F), \mathbb{Q}).$$

According to Suslin [46],

$$H_n(GL_n(F)) \cong H_n(GL(F)).$$

Therefore, we get a filtration,

$$K_n(F)_{\mathbb{Q}} = K_n^{(0)}(F)_{\mathbb{Q}} \supset \dots$$

where

$$K_n^{(i)}(F) = H_n(GL_{n-i}(F), \mathbb{Q}) \cap \operatorname{Prim} H_n(GL(F), \mathbb{Q}).$$

Goncharov [22] conjectures:

$$K_n^{(p)}(F)_{\mathbb{Q}} = \bigoplus_{i \leq n-p} K_n^{[i]}(F)_{\mathbb{Q}}$$

where $K_n^{[i]}(F)$ corresponds to the Adams filtration.

Set

$$K_n^{\{i\}}(F) = K_n^{(i)}(F)/K_n^{(i+1)}(F). \tag{5.23}$$

Suslin proved that

$$K_n^{\{0\}}(F)_{\mathbb{Q}} \cong K_n^M(F)_{\mathbb{Q}}.$$

Goncharov [22] conjectures:

$$H^i(B_F(3) \otimes \mathbb{Q}) \cong K_{6-i}^{\{3-i\}}(F) \qquad \text{for} \quad i = 1, 2.$$

Recall that our first condition (5.13) is that

$$x \wedge y \wedge z = 0 \quad \text{in} \quad H^3(B_{\mathbb{Q}(S)}(3) \otimes \mathbb{Q}) \cong K_3^M(\mathbb{Q}(S))_{\mathbb{Q}}.$$

Note that the second condition (5.15) is

$$[x_i]_2 \otimes y_i = 0 \quad \text{in} \quad H^2(B_{\mathbb{Q}(C)}(3) \otimes \mathbb{Q}) \overset{?}{\cong} K_4^{\{1\}}(\mathbb{Q}(C)).$$

Hence, the conditions from section 5.2 can be translated as certain elements in different K-theories must be zero, which is analogous to the two-variable case.

5.4 Examples

Now we will apply the machinery that was described in the previous sections in order to understand many examples of Mahler measure formulas in three variables. We

will study all the examples that are known to be related to $\zeta(3)$ and the trilogarithm.

5.4.1 Smyth's example

We are going to start with the simplest example in three variables, which was also due to Smyth [7]:

$$\pi^2 m(1+x+y+z) = \frac{7}{2}\zeta(3). \tag{5.24}$$

It is easy to see that the problem amounts to compute the Mahler measure of

$$z = \frac{1-x}{1-y}.$$

Since we would like to see that $\eta(x,y,z)$ is exact, we need to solve equation (5.13) for this case. The equation with the wedge product yields

$$\begin{aligned} x \wedge y \wedge z &= x \wedge y \wedge \frac{1-x}{1-y} = x \wedge y \wedge (1-x) - x \wedge y \wedge (1-y) \\ &= -x \wedge (1-x) \wedge y - y \wedge (1-y) \wedge x. \end{aligned}$$

In other words,

$$\eta(x,y,z) = -\eta(x,1-x,y) - \eta(y,1-y,x).$$

We need to analyze

$$\Delta = -[x]_2 \otimes y - [y]_2 \otimes x$$

under the condition

$$z - \frac{1-x}{1-y} = z^{-1} - \frac{1-x^{-1}}{1-y^{-1}} = 0.$$

One way of expressing this is

$$\left(\frac{1-x}{1-y}\right)\left(\frac{1-x^{-1}}{1-y^{-1}}\right) = zz^{-1} = 1$$

which translates into

$$(xy-1)(x-y) = 0.$$

When $xy = 1$ we obtain

$$\Delta = 2[x]_2 \otimes x.$$

When $x = y$ we obtain

$$\Delta = -2[x]_2 \otimes x.$$

We may also need to take into account the cases when z is infinity or zero. But those correspond to $x = 1$ or $y = 1$ and $\Delta = 0$ in those circumstances.

We obtain

$$-\omega(x,y) - \omega(y,x) = \pm 2\omega(x,x),$$

which yields

$$m(P) = \frac{1}{4\pi^2}\int_\gamma 2\omega(x,x).$$

We now need to check the path of integration γ. Since the equations $xy = 1$ and $x = y$ intersect in $(\pm 1, \pm 1)$, there are four paths, which can be parameterized

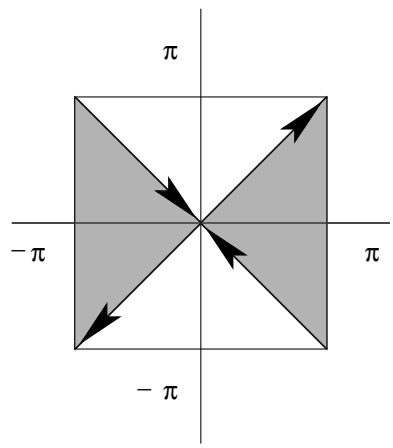

Figure 5.2: Integration set for $1 + x + y + z$.

as

$$x = \mathrm{e}^{\alpha \mathrm{i}} \quad 0 \leq \alpha \leq \pi \quad y = x \quad -2[x]_3$$

$$x = \mathrm{e}^{\alpha \mathrm{i}} \quad \pi \geq \alpha \geq 0 \quad yx = 1 \quad 2[x]_3$$

$$x = \mathrm{e}^{\alpha \mathrm{i}} \quad 0 \geq \alpha \geq -\pi \quad y = x \quad -2[x]_3$$

$$x = \mathrm{e}^{\alpha \mathrm{i}} \quad -\pi \leq \alpha \leq 0 \quad yx = 1 \quad 2[x]_3$$

Picture 5.4.1 shows the integration set for the problem in terms of $\arg x$ and $\arg y$. Γ is represented by the shaded area and γ is its boundary.

Finally

$$m(P) = \frac{1}{4\pi^2} 8(\mathcal{L}_3(1) - \mathcal{L}_3(-1)) = \frac{7}{2\pi^2}\zeta(3).$$

5.4.2 Another example by Smyth

We will now be concerned with another example due to Smyth [43],

$$1 + x + y^{-1} - (1 + x + y)z.$$

In this case, the equation for the wedge product yields

$$\begin{aligned} x \wedge y \wedge z &= x \wedge y \wedge (1 + x + y^{-1}) - x \wedge y \wedge (1 + x + y) \\ &= -x \wedge y^{-1} \wedge (1 + x + y^{-1}) - x \wedge y \wedge (1 + x + y). \end{aligned}$$

But

$$\begin{aligned} x \wedge y \wedge (1 + x + y) &= \frac{x}{y} \wedge y \wedge (1 + x + y) \\ &= \frac{x}{y} \wedge (x + y) \wedge (1 + x + y) - \frac{x}{y} \wedge \left(1 + \frac{x}{y}\right) \wedge (1 + x + y) \\ &= (-x - y) \wedge (1 + x + y) \wedge \frac{x}{y} - \left(-\frac{x}{y}\right) \wedge \left(1 + \frac{x}{y}\right) \wedge (1 + x + y). \end{aligned}$$

Then we need to analyze

$$\Delta = -\left[-x - \frac{1}{y}\right]_2 \otimes xy + [-xy]_2 \otimes \left(1 + x + \frac{1}{y}\right) - [-x - y]_2 \otimes \frac{x}{y} + \left[-\frac{x}{y}\right]_2 \otimes (1 + x + y).$$

Using the same trick as in the previous example, we are now under the condition

$$\frac{(1 + x + y^{-1})(1 + x^{-1} + y)}{(1 + x + y)(1 + x^{-1} + y^{-1})} = 1,$$

which translates into

$$(x - x^{-1})(y - y^{-1}) = 0.$$

If $y = -1$,

$$\Delta = -[1 - x]_2 \otimes (-x) + [x]_2 \otimes x - [1 - x]_2 \otimes (-x) + [x]_2 \otimes x$$

$$= 4[x]_2 \otimes x.$$

If $y = 1$,

$$\Delta = -2\left[-1-x\right]_2 \otimes x + 2\left[-x\right]_2 \otimes (2+x) = 2\left[2+x\right]_2 \otimes x + 2\left[-x\right]_2 \otimes (2+x)\,.$$

We will use the five-term relation starting with $[2+x]_2$ and $[-x]_2$,

$$2[2+x]_2 + 2[-x]_2 + [(1+x)^2]_2 = 0.$$

We obtain

$$\Delta = -2[-x]_2 \otimes x - [(1+x)^2]_2 \otimes x - 2[2+x]_2 \otimes (2+x) - [(1+x)^2]_2 \otimes (2+x)$$

$$= -2[-x]_2 \otimes (-x) - 2[2+x]_2 \otimes (2+x) + [-2x-x^2]_2 \otimes (-2x-x^2).$$

If $x = -1$,

$$\Delta = -\left[1-\frac{1}{y}\right]_2 \otimes y - [y]_2 \otimes y + [1-y]_2 \otimes (-y) + \left[\frac{1}{y}\right]_2 \otimes y$$

$$= -4[y]_2 \otimes y.$$

If $x = 1$,

$$\Delta = -\left[-1-\frac{1}{y}\right]_2 \otimes y + [-y]_2 \otimes \left(2+\frac{1}{y}\right) - [-1-y]_2 \otimes \frac{1}{y} + \left[-\frac{1}{y}\right]_2 \otimes (2+y).$$

We will use the five-term relation starting with $\left[\frac{1}{y}\right]_2$ and $[-1-y]_2$,

$$2\left[-\frac{1}{y}\right]_2 + 2[-1-y]_2 + [-2y-y^2]_2 = 0$$

then

$$2\left[-\frac{1}{y}\right]_2 + 2[-1-y]_2 = [(1+y)^2]_2.$$

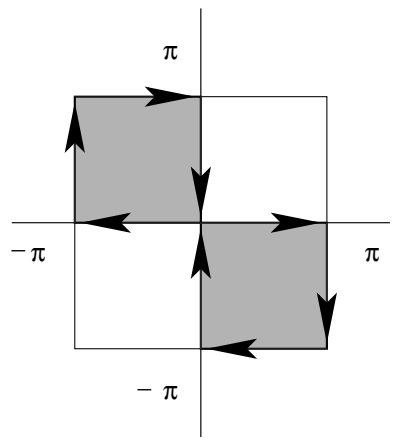

Figure 5.3: Integration set for $1 + x + y^{-1} - (1 + x + y)z$.

Now

$$-[-1-y]_2 \otimes \frac{1}{y} + \left[-\frac{1}{y}\right]_2 \otimes (2+y)$$

$$= -\frac{1}{2}[(1+y)^2]_2 \otimes \frac{1}{y} + \left[-\frac{1}{y}\right]_2 \otimes \frac{1}{y} + \frac{1}{2}[(1+y)^2]_2 \otimes (2+y) - [-1-y]_2 \otimes (2+y)$$

$$= -\frac{1}{2}[-2y-y^2]_2 \otimes (-2y-y^2) + \left[-\frac{1}{y}\right]_2 \otimes \left(-\frac{1}{y}\right) + [2+y]_2 \otimes (2+y).$$

Then we obtain

$$\Delta = -\frac{1}{2}\left[-\frac{2}{y} - \frac{1}{y^2}\right]_2 \otimes \left(-\frac{2}{y} - \frac{1}{y^2}\right) + [-y]_2 \otimes (-y) + \left[2 + \frac{1}{y}\right]_2 \otimes \left(2 + \frac{1}{y}\right)$$

$$-\frac{1}{2}[-2y-y^2]_2 \otimes (-2y-y^2) + \left[-\frac{1}{y}\right]_2 \otimes \left(-\frac{1}{y}\right) + [2+y]_2 \otimes (2+y).$$

We may need to be careful about poles or zeros of z. But those are at the points $(x, y) = (\zeta_6, \zeta_6^{-1})$, and they do not affect the integration because they are just some points and the integration is in dimension 2.

We compute (see picture 5.4.2)

$x = \mathrm{e}^{\alpha \mathrm{i}}$	$-\pi \leq \alpha \leq 0$	$y = -1$	$4[x]_3$
$x = \mathrm{e}^{\alpha \mathrm{i}}$	$0 \geq \alpha \geq -\pi$	$y = 1$	$-2[-x]_3 - 2[2+x]_3 + [-2x - x^2]_3$
$y = \mathrm{e}^{\alpha \mathrm{i}}$	$0 \leq \alpha \leq \pi$	$x = -1$	$-4[y]_3$
$y = \mathrm{e}^{\alpha \mathrm{i}}$	$\pi \geq \alpha \geq 0$	$x = 1$	$-\frac{1}{2}[-2y^{-1} - y^{-2}]_3 + [-y]_3$ $+[2+y^{-1}]_3 - \frac{1}{2}[-2y - y^2]_3 + [-y^{-1}]_3 + [2+y]_3$
$x = \mathrm{e}^{\alpha \mathrm{i}}$	$\pi \geq \alpha \geq 0$	$y = -1$	$4[x]_3$
$x = \mathrm{e}^{\alpha \mathrm{i}}$	$0 \leq \alpha \leq \pi$	$y = 1$	$-2[-x]_3 - 2[2+x]_3 + [-2x - x^2]_3$
$y = \mathrm{e}^{\alpha \mathrm{i}}$	$0 \geq \alpha \geq -\pi$	$x = -1$	$-4[y]_3$
$y = \mathrm{e}^{\alpha \mathrm{i}}$	$-\pi \leq \alpha \leq 0$	$x = 1$	$-\frac{1}{2}[-2y^{-1} - y^{-2}]_3 + [-y]_3$ $+[2+y^{-1}]_3 - \frac{1}{2}[-2y - y^2]_3 + [-y^{-1}]_3 + [2+y]_3$

Then we obtain

$$4\pi^2 m(P) = 16(\mathcal{L}_3(1) - \mathcal{L}_3(-1)) + 4(2\mathcal{L}_3(-1) - 3\mathcal{L}_3(1) + 2\mathcal{L}_3(3) - \mathcal{L}_3(-3))$$

$$= 4\mathcal{L}_3(1) - 8\mathcal{L}_3(-1) + 8\mathcal{L}_3(3) - 4\mathcal{L}_3(-3).$$

It will be necessary to use the identity:

$$2\mathcal{L}_3(3) - \mathcal{L}_3(-3) = \frac{13}{6}\zeta(3)$$

which is essentially Lemma 6 in Smyth's [43].

Finally,

$$m(P) = \frac{14}{3\pi^2}\zeta(3).$$

5.4.3 An example from section 3.1.2

The following example was first computed in [29]:

$$z = \frac{(1+x)(1+y)}{(1-x)(1-y)}.$$

We have,

$$\begin{aligned} x \wedge y \wedge z &= x \wedge y \wedge (1+x) + x \wedge y \wedge (1+y) - x \wedge y \wedge (1-x) - x \wedge y \wedge (1-y) \\ &= -(-x) \wedge (1+x) \wedge y + (-y) \wedge (1+y) \wedge x + x \wedge (1-x) \wedge y - y \wedge (1-y) \wedge x. \end{aligned}$$

Thus, we need to consider

$$\Delta = [x]_2 \otimes y - [y]_2 \otimes x - [-x]_2 \otimes y + [-y]_2 \otimes x.$$

This time the condition is

$$\frac{(1+x)(1+y)(1+x^{-1})(1+y^{-1})}{(1-x)(1-y)(1-x^{-1})(1-y^{-1})} = 1,$$

which becomes

$$(xy+1)(x+y) = 0.$$

When $xy = -1$,

$$\Delta = -2[x]_2 \otimes x + 2[-x]_2 \otimes (-x).$$

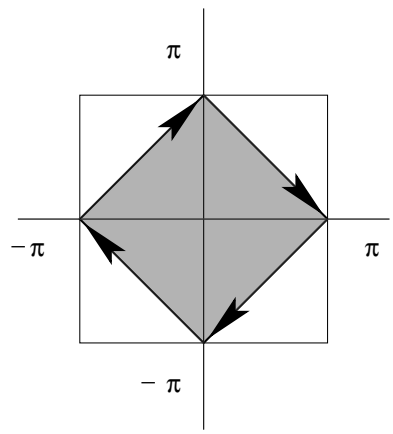

Figure 5.4: Integration set for $(1+x)(1+y)-(1-x)(1-y)z$.

When $x=-y$,

$$\Delta = 2[x]_2 \otimes x - 2[-x]_2 \otimes (-x).$$

The poles or zeros in this case occur with $x=\pm 1$ and $y=\pm 1$, but we always obtain $\Delta = 0$ and they do not affect the integration.

We now need to check the integration path γ.

$$x = \mathrm{e}^{\alpha \mathrm{i}} \quad 0 \geq \alpha \geq -\pi \quad y = -x^{-1} \quad -2[x]_3 + 2[-x]_3$$

$$x = \mathrm{e}^{\alpha \mathrm{i}} \quad \pi \geq \alpha \geq 0 \quad y = -x \quad 2[x]_3 - 2[-x]_3$$

$$x = \mathrm{e}^{\alpha \mathrm{i}} \quad 0 \leq \alpha \leq \pi \quad y = -x^{-1} \quad -2[x]_3 + 2[-x]_3$$

$$x = \mathrm{e}^{\alpha \mathrm{i}} \quad -\pi \leq \alpha \leq 0 \quad y = -x \quad 2[x]_3 - 2[-x]_3$$

Therefore, we obtain,

$$4\pi^2 m(P) = 16(\mathcal{L}_3(1) - \mathcal{L}_3(-1)),$$

$$m(P) = \frac{7}{\pi^2}\zeta(3).$$

5.4.4 Another example from section 3.1.2

Now we will study an example that is of different nature because its symbol in K-theory is not trivial. It was first computed in [29]:

$$z = \frac{1 + x + 2xy}{1 - x}.$$

We have

$$x \wedge y \wedge z = x \wedge y \wedge (1 + x + 2xy) - x \wedge y \wedge (1 - x).$$

But

$$x \wedge 2y \wedge (1 + x + 2xy) = (-x) \wedge (-2y) \wedge (1 + x(1 + 2y))$$

$$= (-x(1 + 2y)) \wedge (-2y) \wedge (1 + x(1 + 2y)) - (1 + 2y) \wedge (-2y) \wedge (1 + x(1 + 2y)).$$

Then

$$\begin{aligned} x \wedge y \wedge z &= 2 \wedge x \wedge z + x \wedge (1 - x) \wedge (2y) - (-x(1 + 2y)) \wedge (1 + x(1 + 2y)) \wedge (-2y) \\ &\quad + (-2y) \wedge (1 + 2y) \wedge (1 + x(1 + 2y)). \end{aligned}$$

We need to analyze

$$\Delta = [x]_2 \otimes (2y) - [-x(1 + 2y)]_2 \otimes (-2y) + [-2y]_2 \otimes (1 + x(1 + 2y)),$$

and then we also need to compute the integral over $\eta(2, x, z)$.

For Δ we are in the situation

$$\frac{(1 + x + 2xy)(1 + x^{-1} + 2x^{-1}y^{-1})}{(1 - x)(1 - x^{-1})} = 1,$$

which translates into

$$xy = -1, \qquad x = -1, \qquad \text{or} \qquad y = -1.$$

For $x = -1$,

$$\Delta = -[1+2y]_2 \otimes (-2y) + [-2y]_2 \otimes (-2y) = 2[-2y]_2 \otimes (-2y).$$

For $y = -1$, $\Delta = 0$.

For $xy = -1$,

$$\Delta = \left[-\frac{1}{y}\right]_2 \otimes (2y) - \left[\frac{1+2y}{y}\right]_2 \otimes (-2y) + [-2y]_2 \otimes \left(-1 - \frac{1}{y}\right).$$

But

$$-\left[\frac{1+2y}{y}\right]_2 = \left[-1 - \frac{1}{y}\right]_2$$

and we may use the five-term relation,

$$\left[-1 - \frac{1}{y}\right]_2 + [-2y]_2 + [-1-2y]_2 + \left[-\frac{1}{y}\right]_2 = 0. \tag{5.25}$$

Then

$$\Delta = -[-2y]_2 \otimes (-2y) - [-1-2y]_2 \otimes (-2y) - \left[-1 - \frac{1}{y}\right]_2 \otimes \left(-1 - \frac{1}{y}\right)$$

$$-[-1-2y]_2 \otimes \left(-1 - \frac{1}{y}\right) - \left[-\frac{1}{y}\right]_2 \otimes \left(-1 - \frac{1}{y}\right).$$

$$\Delta = -[-2y]_2 \otimes (-2y) - \left[-1 - \frac{1}{y}\right]_2 \otimes \left(-1 - \frac{1}{y}\right) + \left[1 + \frac{1}{y}\right]_2 \otimes \left(1 + \frac{1}{y}\right)$$

$$+[2+2y]_2 \otimes 2 + 2y.$$

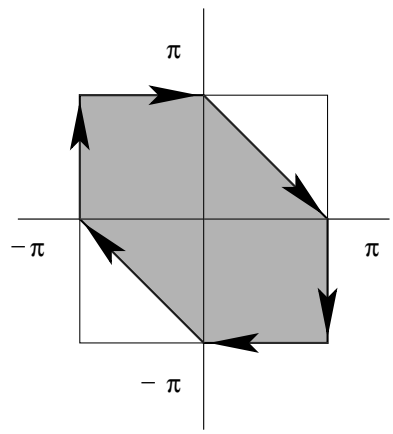

Figure 5.5: Integration set for $1 + x + 2xy - (1 - x)z$.

There are zeros when $1 + x + 2xy = 0$, and that only can happen if $(x, y) = (-1, -1)$ and that is just a point. There are poles for $x = 1$, in this case

$$\Delta = -[-1 - 2y]_2 \otimes (2y) + [-2y]_2 \otimes (2 + 2y).$$

By the five-term relation (5.25),

$$\Delta = \left[-1 - \frac{1}{y}\right]_2 \otimes (2y) + [-2y]_2 \otimes (2y) - [-y]_2 \otimes (2y)$$

$$- \left[-1 - \frac{1}{y}\right]_2 \otimes (2 + 2y) + [2 + 2y]_2 \otimes (2 + 2y) + [-y]_2 \otimes (2 + 2y).$$

Integrating to

$$\Gamma = [-2y]_3 + [2 + 2y]_3 + \left[1 + \frac{1}{y}\right]_3 - \left[-1 - \frac{1}{y}\right]_3$$

but this integrates to zero when y moves in the unit circle.

We know need to check the integration path γ.

$y = \mathrm{e}^{\alpha \mathrm{i}}$	$0 \leq \alpha \leq \pi$	$x = -1$	$2[-2y]_3$
$y = \mathrm{e}^{\alpha \mathrm{i}}$	$-\pi \leq \alpha \leq 0$	$x = -y^{-1}$	$-[-2y]_3 - [-1-y^{-1}]_3 + [1+y^{-1}]_3 + [2+2y]_3$
$y = \mathrm{e}^{\alpha \mathrm{i}}$	$0 \geq \alpha \geq -\pi$	$x = -1$	$2[-2y]_3$
$y = \mathrm{e}^{\alpha \mathrm{i}}$	$\pi \geq \alpha \geq 0$	$x = -y^{-1}$	$-[-2y]_3 - [-1-y^{-1}]_3 + [1+y^{-1}]_3 + [2+2y]_3$

We obtain,

$$4\pi^2 m(P) = \int \eta(2,x,z) + 2(2\mathcal{L}_3(2) - 2\mathcal{L}_3(-2)) + 2(\mathcal{L}_3(4) + 2\mathcal{L}_3(2) - 2\mathcal{L}_3(-2)).$$

But $[4]_3 = 4[2]_3 + 4[-2]_3$, then

$$4\pi^2 m(P) = -\int \eta(2,x,z) + 16\mathcal{L}_3(2).$$

Since $[-1]_3 + [2]_3 + [2]_3 = [1]_3$, we get

$$[2]_3 = \frac{1}{2}([1]_3 - [-1]_3) = \frac{7}{8}[1]_3.$$

Then

$$4\pi^2 m(P) = -\int \eta(2,x,z) + 14\zeta(3).$$

We still need to compute

$$\int_{-\pi \leq \arg x, \arg y, \arg x + \arg y \leq \pi} \eta(2,x,z).$$

Since $z(1-x) = 1 + x + 2xy$,

$$\frac{\mathrm{d}z}{z} = \frac{z+2y+1}{z(1-x)}\,\mathrm{d}x + \frac{2x}{z(1-x)}\,\mathrm{d}y.$$

But $|x| = 1$, then

$$\mathrm{d}\arg x\,\mathrm{d}\arg z = -\operatorname{Re}\left(\frac{\mathrm{d}x}{x} \wedge \frac{\mathrm{d}z}{z}\right) = -\operatorname{Re}\left(\frac{\mathrm{d}x}{x} \wedge \frac{2x}{z(1-x)}\,\mathrm{d}y\right).$$

Thus,

$$-\int \eta(2,x,z) = \log 2 \int \mathrm{d}\arg x\,\mathrm{d}\arg z = -\operatorname{Re}\left(\log 2 \int \frac{1}{1+\frac{1+x}{2xy}}\frac{\mathrm{d}x}{x}\frac{\mathrm{d}y}{y}\right).$$

Consider

$$\int \sum_{k=0}^{\infty}\left(-\frac{1+x}{2xy}\right)^k \frac{\mathrm{d}x}{x}\frac{\mathrm{d}y}{y}.$$

Setting $x = \mathrm{e}^{\mathrm{i}\alpha}$, $y = \mathrm{e}^{\mathrm{i}\beta}$,

$$= -\left(\int_{-\pi}^{0}\int_{-\pi-\alpha}^{\pi} + \int_{0}^{\pi}\int_{-\pi}^{\pi-\alpha}\right)\sum_{k=0}^{\infty}\left(-\frac{(1+\mathrm{e}^{-\mathrm{i}\alpha})\mathrm{e}^{-\mathrm{i}\beta}}{2}\right)^k \mathrm{d}\beta\,\mathrm{d}\alpha. \tag{5.26}$$

We consider each term in the series separately,

$$-\int_{-\pi}^{0}\int_{-\pi-\alpha}^{\pi}(-(1+\mathrm{e}^{-\mathrm{i}\alpha})\mathrm{e}^{-\mathrm{i}\beta})^k\,\mathrm{d}\beta\,\mathrm{d}\alpha.$$

If $k = 0$, the above integral is $-\frac{3\pi^2}{2}$. If not,

$$= -\int_{-\pi}^{0}(-(1+\mathrm{e}^{-\mathrm{i}\alpha}))^k\frac{(-1)^k(1-\mathrm{e}^{\mathrm{i}k\alpha})}{-\mathrm{i}k}\,\mathrm{d}\alpha = -\frac{\mathrm{i}}{k}\int_{-\pi}^{0}(1+\mathrm{e}^{-\mathrm{i}\alpha})^k(1-\mathrm{e}^{\mathrm{i}k\alpha})\,\mathrm{d}\alpha$$

$$= -\frac{\mathrm{i}}{k}\sum_{l=0}^{k}\binom{k}{l}\int_{-\pi}^{0}\mathrm{e}^{-\mathrm{i}l\alpha}(1-\mathrm{e}^{\mathrm{i}k\alpha})\,\mathrm{d}\alpha$$

$$= -\frac{\mathrm{i}}{k}\left(\frac{2\mathrm{i}}{k}(1-(-1)^k) + \sum_{l=1}^{k-1}\binom{k}{l}\mathrm{i}\left(\frac{1-(-1)^l}{l} + \frac{1-(-1)^{k-l}}{k-l}\right)\right)$$

$$= \frac{2}{k}\sum_{l=1}^{k}\binom{k}{l}\frac{1-(-1)^l}{l}.$$

Hence, in order to evaluate the first term in equation (5.26), we need to evaluate

$$\sum_{k=1}^{\infty}\frac{2}{k2^k}\sum_{l=1}^{k}\binom{k}{l}\frac{1-(-1)^l}{l} = 2\sum_{l=1}^{\infty}\frac{1-(-1)^l}{l}\sum_{k=l}^{\infty}\binom{k}{l}\frac{1}{k2^k}.$$

But

$$\sum_{k=l}^{\infty}\binom{k}{l}\frac{x^k}{k} = \frac{x^l}{l!}\sum_{k=l}^{\infty}(k-1)\dots(k-l+1)x^{k-l} = \frac{x^l}{l!}\frac{\partial^{l-1}}{\partial x^{l-1}}\left(\frac{1}{1-x}\right)$$

$$= \frac{x^l}{l!}\frac{(l-1)!}{(1-x)^l} = \frac{x^l}{l(1-x)^l}.$$

Therefore,

$$\sum_{k=1}^{\infty}\frac{2}{k2^k}\sum_{l=1}^{k}\binom{k}{l}\frac{1-(-1)^l}{l} = 2\sum_{l=1}^{\infty}\frac{1-(-1)^l}{l^2} = 3\zeta(2) = \frac{\pi^2}{2}.$$

The second integral is the same, so as a conclusion, we get

$$\int\sum_{k=0}^{\infty}\left(-\frac{1+x}{2xy}\right)^k\frac{\mathrm{d}x}{x}\frac{\mathrm{d}y}{y} = -2\pi^2.$$

And,

$$-\int\eta(2,x,z) = 2\pi^2\log 2.$$

Finally, the whole formula becomes

$$m(P) = \frac{7}{2\pi^2}\zeta(3) + \frac{\log 2}{2}.$$

5.4.5 The case of $\mathrm{Res}_{\{0,m,m+n\}}$

We will now proceed to the understanding of a non trivial example that comes from the world of resultants, namely, $\mathrm{Res}_{\{0,m,m+n\}}$. This example was computed in [18]. Its Mahler measure is the same as the Mahler measure of a polynomial that may be described by the following rational function

$$z = \frac{(1-x)^m(1-y)^n}{(1-xy)^{m+n}}.$$

The equation for the wedge product becomes

$$\begin{aligned} x \wedge y \wedge z &= mx \wedge y \wedge (1-x) + nx \wedge y \wedge (1-y) - (m+n)x \wedge y \wedge (1-xy) \\ &= -mx \wedge (1-x) \wedge y + ny \wedge (1-y) \wedge x \\ &\quad +mxy \wedge (1-xy) \wedge y - nxy \wedge (1-xy) \wedge x. \end{aligned}$$

Thus we need to consider

$$\Delta = m([xy]_2 \otimes y - [x]_2 \otimes y) - n([xy]_2 \otimes x - [y]_2 \otimes x),$$

with the condition

$$\frac{(1-x)^m(1-y)^n(1-x^{-1})^m(1-y^{-1})^n}{(1-xy)^{m+n}(1-x^{-1}y^{-1})^{m+n}} = 1.$$

Let us denote

$$x_1 = \frac{1-x}{1-xy} \quad y_1 = \frac{1-y}{1-xy} \quad \widehat{x}_1 = 1 - x_1 \quad \widehat{y}_1 = 1 - y_1.$$

The condition can be then rewritten as

$$x_1^m y_1^n \widehat{x}_1^n \widehat{y}_1^m = 1.$$

Now we use the five-term relation:

$$[x]_2 + [y]_2 + [1 - xy]_2 + [x_1]_2 + [y_1]_2 = 0.$$

Then we obtain

$$\Delta = m([y]_2 \otimes y + [x_1]_2 \otimes y + [y_1]_2 \otimes y) - n([x]_2 \otimes x + [x_1]_2 \otimes x + [y_1]_2 \otimes x).$$

Now note that $x = \frac{\widehat{x}_1}{y_1}$, $y = \frac{\widehat{y}_1}{x_1}$.
Thus, we can write

$$\Delta = m([y]_2 \otimes y + [x_1]_2 \otimes \widehat{y}_1 - [x_1]_2 \otimes x_1 + [y_1]_2 \otimes \widehat{y}_1 - [y_1]_2 \otimes x_1)$$

$$-n([x]_2 \otimes x + [x_1]_2 \otimes \widehat{x}_1 - [x_1]_2 \otimes y_1 + [y_1]_2 \otimes \widehat{x}_1 - [y_1]_2 \otimes y_1)$$

$$= m[y]_2 \otimes y + [x_1]_2 \otimes \widehat{y}_1^m - m[x_1]_2 \otimes x_1 - m[\widehat{y}_1]_2 \otimes \widehat{y}_1 - [y_1]_2 \otimes x_1^m$$

$$-n[x]_2 \otimes x + n[\widehat{x}_1]_2 \otimes \widehat{x}_1 + [x_1]_2 \otimes y_1^n - [y_1]_2 \otimes \widehat{x}_1^n + n[y_1]_2 \otimes y_1.$$

Because of the condition

$$[x_1]_2 \otimes y_1^n \widehat{y}_1^m - [y_1]_2 \otimes x_1^m \widehat{x}_1^n = -[x_1]_2 \otimes x_1^m \widehat{x}_1^n + [y_1]_2 \otimes y_1^n \widehat{y}_1^m$$

$$= -m[x_1]_2 \otimes x_1 + n[\widehat{x}_1]_2 \otimes \widehat{x}_1 + n[y_1]_2 \otimes y_1 - m[\widehat{y}_1]_2 \otimes \widehat{y}_1,$$

we obtain,

$$\Delta = m([y]_2 \otimes y - [\widehat{y}_1]_2 \otimes \widehat{y}_1 - [x_1]_2 \otimes x_1 - [\widehat{y}_1]_2 \otimes \widehat{y}_1 - [x_1]_2 \otimes x_1)$$

$$-n([x]_2 \otimes x - [\widehat{x}_1]_2 \otimes \widehat{x}_1 - [y_1]_2 \otimes y_1 - [\widehat{x}_1]_2 \otimes \widehat{x}_1 - [y_1]_2 \otimes y_1).$$

$$\Delta = m([y]_2 \otimes y - 2[\widehat{y}_1]_2 \otimes \widehat{y}_1 - 2[x_1]_2 \otimes x_1) - n([x]_2 \otimes x - 2[\widehat{x}_1]_2 \otimes \widehat{x}_1 - 2[y_1]_2 \otimes y_1)$$

There are zeros for $x = 1$ and $y = 1$, but those correspond to $\Delta = m[y]_2 \otimes y$ and $\Delta = -n[x]_2 \otimes x$. They lead to $\Gamma = m[y]_3$ and $\Gamma = -n[x]_3$ and integrate to zero when the variables move in the unit circle.

The poles are at $xy = 1$, which corresponds to $\Delta = (m-n)[x]_2 \otimes x$. Integrating, we obtain $\Gamma = (m-n)[x]_3$ which leads to zero when x moves in the unit circle.

We now need to study the path of integration. First write $x = \mathrm{e}^{2\mathrm{i}\alpha}$, $y = \mathrm{e}^{2\mathrm{i}\beta}$, for $-\frac{\pi}{2} \leq \alpha, \beta \leq \frac{\pi}{2}$. Then,

$$x_1 = \mathrm{e}^{-\mathrm{i}\beta}\frac{\sin\alpha}{\sin(\alpha+\beta)} \quad y_1 = \mathrm{e}^{-\mathrm{i}\alpha}\frac{\sin\beta}{\sin(\alpha+\beta)}$$

and

$$\widehat{x}_1 = \mathrm{e}^{\mathrm{i}\alpha}\frac{\sin\beta}{\sin(\alpha+\beta)} \quad \widehat{y}_1 = \mathrm{e}^{\mathrm{i}\beta}\frac{\sin\alpha}{\sin(\alpha+\beta)}.$$

Let $a = \left|\frac{\sin\alpha}{\sin(\alpha+\beta)}\right|$, $b = \left|\frac{\sin\beta}{\sin(\alpha+\beta)}\right|$. Then we may write

$$x_1 = \pm a\mathrm{e}^{-\mathrm{i}\beta} \quad y_1 = \pm b\mathrm{e}^{-\mathrm{i}\alpha} \quad \widehat{x}_1 = \pm b\mathrm{e}^{\mathrm{i}\alpha} \quad \widehat{y}_1 = \pm a\mathrm{e}^{\mathrm{i}\beta}.$$

By means of the Sine theorem, we may think of a, b and 1 as the sides of a triangle with the additional condition

$$a^m b^n = 1.$$

The triangle determines the angles, α and β, which are opposite to the sides a, b respectively. We need to be careful and take the complement of an angle if it

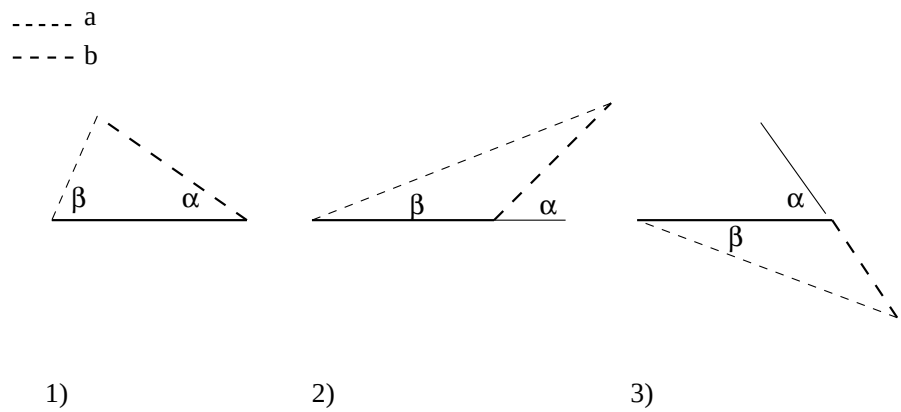

Figure 5.6: We are integrating over all the possible triangles. The angles have to be measured negatively if they are greater than $\frac{\pi}{2}$ as α in the case 2). We will not count the triangles pointing down as in 3).

happens to be greater than $\frac{\pi}{2}$, (this corresponds to the cases when the sines are negatives). However, we need to be cautious. In fact, the problem of constructing the triangle given the sides has always two symmetric solutions. We are going to count each triangle once, so we will need to multiply our final result by two. To sum up, a and b are enough to describe the set where the integration is performed.

Now, the boundaries (where the triangle degenerates) are three: $b+1=a$, $a+1=b$ and $a+b=1$. Let

$$\begin{array}{llll} \phi_1 & \text{be the root of} & x^{m+n}+x^n-1=0 & \text{with} \quad 0 \le \phi_1 \le 1, \\ \phi_2 & \text{be the root of} & x^{m+n}-x^n-1=0 & \text{with} \quad 1 \le \phi_2. \end{array}$$

Then the first two conditions are translated as

$$\begin{array}{llll} a=\phi_1^{-n} & b=\phi_1^m & \alpha=0 & \beta=0 \\ a=\phi_2^{-n} & b=\phi_2^m & \alpha=0 & \beta=0 \end{array}$$

The third condition is inconsequential, since it requires both $a, b \le 1$ (but they can not be both equal to 1 at the same time) and $a^m b^n = 1$.

Hence, the integration path (from condition $a+1=b$ to $b+1=a$) is

$$0 \le \alpha \le \theta_1 \quad 0 \ge \beta \ge -\tfrac{\pi}{2}$$

$$\theta_1 \le \alpha \le \tfrac{\pi}{2} \quad \tfrac{\pi}{2} \ge \beta \ge \theta_2$$

$$-\tfrac{\pi}{2} \le \alpha \le 0 \quad \theta_2 \ge \beta \ge 0$$

Here θ_1 is the angle that is opposite to the side a when the triangle is rectangular with hypotenuse b and θ_2 is opposite to b when a is the hypotenuse. We do not need to compute those angles. In fact, we may describe the integration path as either

$$0 \le \alpha \le \frac{\pi}{2} \qquad -\frac{\pi}{2} \le \alpha \le 0$$

or

$$0 \ge \beta \ge -\frac{\pi}{2} \qquad \frac{\pi}{2} \ge \beta \ge 0$$

It is fine to think it in this way, because $[x_1]_3 + [\widehat{y}_1]_3$ and $[\widehat{x}_1]_3 + [y_1]_3$ change continuously around the rectangular triangles. Moreover, because of this property, everything reduces to evaluate

$$\Gamma = m([y]_3 - 2[\widehat{y}_1]_3 - 2[x_1]_3) - n([x]_3 - 2[\widehat{x}_1]_3 - 2[y_1]_3)$$

in the cases of $a+1=b$ and $b+1=a$ and computing the difference.

We get

$$4\pi^2 m(P) = 2\left(4n(\mathcal{L}_3(\phi_2^m) - \mathcal{L}_3(-\phi_1^m)) + 4m(\mathcal{L}_3(\phi_1^n) - \mathcal{L}_3(-\phi_2^n))\right).$$

Finally,

$$m(P) = \frac{2n}{\pi^2}(\mathcal{L}_3(\phi_2^m) - \mathcal{L}_3(-\phi_1^m)) + \frac{2m}{\pi^2}(\mathcal{L}_3(\phi_1^n) - \mathcal{L}_3(-\phi_2^n)),$$

which is the same formula as in [18].

The case with $m = n = 1$ is specially nice. Here the rational function has the form

$$z = \frac{(1-x)(1-y)}{1-xy},$$

and

$$m(P) = \frac{4}{\pi^2}(\mathcal{L}_3(\phi) - \mathcal{L}_3(-\phi))$$

where $\phi^2 + \phi - 1 = 0$ and $0 \leq \phi \leq 1$ (in other words, $\phi = \frac{-1+\sqrt{5}}{2}$).

Moreover, using the numerical identity

$$\frac{\zeta_{\mathbb{Q}(\sqrt{5})}(3)}{\zeta(3)} = \frac{1}{\sqrt{5}}(\mathcal{L}_3(\phi) - \mathcal{L}_3(-\phi))$$

which is an explicit example for Zagier's Conjecture 37 in section 5.8.1 (see Zagier [50], Zagier and Gangl [52]), then

$$m(\mathrm{Res}_{\{0,1,2\}}) = \frac{4\sqrt{5}\zeta_{\mathbb{Q}(\sqrt{5})}(3)}{\pi^2\zeta(3)}.$$

5.4.6 Condon's example

The last and most complex example that we will analyze in three variables was discovered numerically by Boyd and proved by Condon [14]. It may be expressed in the following way:

$$z = \frac{(1-y)(1+x)}{1-x}.$$

The wedge product equation becomes:

$$\begin{aligned} x \wedge y \wedge z &= x \wedge y \wedge (1-y) + x \wedge y \wedge (1+x) - x \wedge y \wedge (1-x) \\ &= y \wedge (1-y) \wedge x - (-x) \wedge (1+x) \wedge y + x \wedge (1-x) \wedge y. \end{aligned}$$

Hence we need to consider

$$\Delta = [y]_2 \otimes x - [-x]_2 \otimes y + [x]_2 \otimes y.$$

The condition is

$$\frac{(1-y)(1+x)(1-y^{-1})(1+x^{-1})}{(1-x)(1-x^{-1})} = 1,$$

which may be written as

$$\left(\frac{1+x}{1-x}\right)^2 = \frac{y}{(1-y)^2}.$$

We now use the five term relation,

$$[x]_2 + [-1]_2 + [1+x]_2 + \left[\frac{1-x}{1+x}\right]_2 + \left[\frac{2}{1+x}\right]_2 = 0,$$

$$[x]_2 - [-x]_2 + \left[\frac{1-x}{1+x}\right]_2 - \left[\frac{x-1}{1+x}\right]_2 = 0.$$

Then

$$\Delta = [y]_2 \otimes x - \left[\frac{1-x}{1+x}\right]_2 \otimes y + \left[\frac{x-1}{1+x}\right]_2 \otimes y.$$

Let us write $y = z^2$ such that

$$\frac{1+x}{1-x} = \frac{z}{1-z^2}. \tag{5.27}$$

Then

$$x = \frac{z^2 + z - 1}{-z^2 + z + 1}.$$

Thus we may write,

$$\Delta = [z^2]_2 \otimes \frac{z^2 + z - 1}{-z^2 + z + 1} - \left[\frac{1 - z^2}{z}\right]_2 \otimes z^2 + \left[\frac{z^2 - 1}{z}\right]_2 \otimes z^2.$$

We will split the integration of Δ in two steps. In order to do that, write

$$\Delta_1 = [z^2]_2 \otimes \frac{z^2 + z - 1}{-z^2 + z + 1} \qquad \Delta_2 = 2[z - z^{-1}]_2 \otimes z - 2[z^{-1} - z]_2 \otimes z$$

so that

$$\Delta = \Delta_1 + \Delta_2.$$

We will first work with Δ_1. Let $\varphi = \frac{1+\sqrt{5}}{2}$, so $\varphi^2 - \varphi - 1 = 0$.

By the five-term relation,

$$[\varphi z]_2 + [(\varphi - 1)z]_2 + [1 - z^2]_2 + \left[\frac{1 - \varphi z}{1 - z^2}\right]_2 + \left[\frac{1 - (\varphi - 1)z}{1 - z^2}\right]_2 = 0 \tag{5.28}$$

$$[-\varphi z]_2 + [(1 - \varphi)z]_2 + [1 - z^2]_2 + \left[\frac{1 + \varphi z}{1 - z^2}\right]_2 + \left[\frac{1 + (\varphi - 1)z}{1 - z^2}\right]_2 = 0 \tag{5.29}$$

Observe that we have

$$\Delta_1 = [z^2]_2 \otimes \frac{z^2 + z - 1}{-z^2 + z + 1} = [z^2]_2 \otimes \frac{(\varphi z - 1)((\varphi - 1)z + 1)}{(\varphi z + 1)((\varphi - 1)z - 1)}$$

$$= [z^2]_2 \otimes \frac{1 - \varphi z}{1 - (\varphi - 1)z} - [z^2]_2 \otimes \frac{1 + \varphi z}{1 + (\varphi - 1)z}.$$

Now let us apply the five-term relations (5.28) and (5.29):

$$= [\varphi z]_2 \otimes \frac{1 - \varphi z}{1 - (\varphi - 1)z} + [(\varphi - 1)z]_2 \otimes \frac{1 - \varphi z}{1 - (\varphi - 1)z}$$

$$+\left[\frac{1-\varphi z}{1-z^2}\right]_2 \otimes \frac{1-\varphi z}{1-(\varphi-1)z} + \left[\frac{1-(\varphi-1)z}{1-z^2}\right]_2 \otimes \frac{1-\varphi z}{1-(\varphi-1)z}$$

$$-[-\varphi z]_2 \otimes \frac{1+\varphi z}{1+(\varphi-1)z} - [(1-\varphi)z]_2 \otimes \frac{1+\varphi z}{1+(\varphi-1)z}$$

$$-\left[\frac{1+\varphi z}{1-z^2}\right]_2 \otimes \frac{1+\varphi z}{1+(\varphi-1)z} - \left[\frac{1+(\varphi-1)z}{1-z^2}\right]_2 \otimes \frac{1+\varphi z}{1+(\varphi-1)z}.$$

Then we obtain

$$\Delta_1 = -[1-\varphi z]_2 \otimes (1-\varphi z) + [1-(\varphi-1)z]_2 \otimes (1-(\varphi-1)z)$$

$$+[1+\varphi z]_2 \otimes (1+\varphi z) - [1+(\varphi-1)z]_2 \otimes (1+(\varphi-1)z)$$

$$-[\varphi z]_2 \otimes (1-(\varphi-1)z) + [-\varphi z]_2 \otimes (1+(\varphi-1)z) + [(\varphi-1)z]_2 \otimes (1-\varphi z) - [(1-\varphi)z]_2 \otimes (1+\varphi z)$$

$$+\left[\frac{1-\varphi z}{1-z^2}\right]_2 \otimes \frac{1-\varphi z}{1-(\varphi-1)z} + \left[\frac{1-(\varphi-1)z}{1-z^2}\right]_2 \otimes \frac{1-\varphi z}{1-(\varphi-1)z}$$

$$-\left[\frac{1+\varphi z}{1-z^2}\right]_2 \otimes \frac{1+\varphi z}{1+(\varphi-1)z} - \left[\frac{1+(\varphi-1)z}{1-z^2}\right]_2 \otimes \frac{1+\varphi z}{1+(\varphi-1)z}.$$

Now we will now work with Δ_2. By the five-term relation,

$$[\varphi+z^{-1}]_2 + [1-(\varphi-1)z]_2 + [z-z^{-1}]_2 + \left[\frac{1+(\varphi-1)z}{1-z^2}\right]_2 + \left[\frac{(\varphi-1)z}{z-z^{-1}}\right]_2 = 0$$

$$[\varphi-z^{-1}]_2 + [1-(1-\varphi)z]_2 + [z^{-1}-z]_2 + \left[\frac{1-(\varphi-1)z}{1-z^2}\right]_2 + \left[\frac{(\varphi-1)z}{z-z^{-1}}\right]_2 = 0$$

$$[1+\varphi z]_2 + [z^{-1}-(\varphi-1)]_2 + [z-z^{-1}]_2 + \left[\frac{\varphi z}{z^{-1}-z}\right]_2 + \left[\frac{1-\varphi z}{1-z^2}\right]_2 = 0$$

$$[1-\varphi z]_2 + [-z^{-1}-(\varphi-1)]_2 + [z^{-1}-z]_2 + \left[\frac{\varphi z}{z^{-1}-z}\right]_2 + \left[\frac{1+\varphi z}{1-z^2}\right]_2 = 0$$

Applying the above equalities, we obtain

$$\Delta_2 = 2\left[z - z^{-1}\right]_2 \otimes z - 2\left[z^{-1} - z\right]_2 \otimes z$$

$$= [\varphi - z^{-1}]_2 \otimes z - [(1-\varphi)z]_2 \otimes z + \left[\frac{1-(\varphi-1)z}{1-z^2}\right]_2 \otimes z$$

$$-[\varphi + z^{-1}]_2 \otimes z + [(\varphi-1)z]_2 \otimes z - \left[\frac{1+(\varphi-1)z}{1-z^2}\right]_2 \otimes z$$

$$-[\varphi z]_2 \otimes z - [\varphi + z^{-1}]_2 \otimes z + \left[\frac{1+\varphi z}{1-z^2}\right]_2 \otimes z$$

$$[-\varphi z]_2 \otimes z + [\varphi - z^{-1}]_2 \otimes z - \left[\frac{1-\varphi z}{1-z^2}\right]_2 \otimes z.$$

We will now use the fact that we know we will integrate in a set were $|z| = 1$. Under those circumstances we have the following two identities:

$$[(\varphi-1)z]_2 \otimes z = [(\varphi-1)\bar{z}]_2 \otimes \bar{z} = [\varphi z]_2 \otimes z \tag{5.30}$$

$$[(1-\varphi)z]_2 \otimes z = [-\varphi z]_2 \otimes z \tag{5.31}$$

Both identities depend on the fact that $|z| = 1$ since we are conjugating and using that $\bar{z} = z^{-1}$.

Thus,

$$\Delta_2 = 2[\varphi - z^{-1}]_2 \otimes z - 2[\varphi + z^{-1}]_2 \otimes z$$

$$+ \left[\frac{1-(\varphi-1)z}{1-z^2}\right]_2 \otimes z - \left[\frac{1+(\varphi-1)z}{1-z^2}\right]_2 \otimes z + \left[\frac{1+\varphi z}{1-z^2}\right]_2 \otimes z - \left[\frac{1-\varphi z}{1-z^2}\right]_2 \otimes z.$$

We will add Δ_1 and Δ_2. But first, let us note

$$\left[\frac{1-\varphi z}{1-z^2}\right]_2 \otimes \frac{1-\varphi z}{z(1-(\varphi-1)z)} = \left[\frac{z^{-1}-\varphi}{z^{-1}-z}\right]_2 \otimes \frac{z^{-1}-\varphi}{z-\varphi} - \left[\frac{1-\varphi z}{1-z^2}\right]_2 \otimes (1-\varphi)$$

$$= -\left[\frac{z^{-1}-z}{z^{-1}-\varphi}\right]_2 \otimes \frac{z^{-1}-\varphi}{z-\varphi} - \left[\frac{1-\varphi z}{1-z^2}\right]_2 \otimes (1-\varphi)$$

$$= -\left[\frac{z-\varphi}{z^{-1}-\varphi}\right]_2 \otimes \frac{z-\varphi}{z^{-1}-\varphi} - \left[\frac{1-\varphi z}{1-z^2}\right]_2 \otimes (\varphi-1).$$

Then, we get

$$\Delta = -[1-\varphi z]_2 \otimes (1-\varphi z) + [1-(\varphi-1)z]_2 \otimes (1-(\varphi-1)z)$$

$$+[1+\varphi z]_2 \otimes (1+\varphi z) - [1+(\varphi-1)z]_2 \otimes (1+(\varphi-1)z)$$

$$-[\varphi z]_2 \otimes (1-(\varphi-1)z) + [-\varphi z]_2 \otimes (1+(\varphi-1)z) + [(\varphi-1)z]_2 \otimes (1-\varphi z) - [(1-\varphi)z]_2 \otimes (1+\varphi z)$$

$$-\left[\frac{z-\varphi}{z^{-1}-\varphi}\right]_2 \otimes \frac{z-\varphi}{z^{-1}-\varphi} + \left[\frac{z-(\varphi-1)}{z^{-1}-(\varphi-1)}\right]_2 \otimes \frac{z-(\varphi-1)}{z^{-1}-(\varphi-1)}$$

$$+\left[\frac{z+\varphi}{z^{-1}+\varphi}\right]_2 \otimes \frac{z+\varphi}{z^{-1}+\varphi} - \left[\frac{z+(\varphi-1)}{z^{-1}+(\varphi-1)}\right]_2 \otimes \frac{z+(\varphi-1)}{z^{-1}+(\varphi-1)}$$

$$-\left[\frac{1-\varphi z}{1-z^2}\right]_2 \otimes (\varphi-1) + \left[\frac{1-(\varphi-1)z}{1-z^2}\right]_2 \otimes \varphi$$

$$+\left[\frac{1+\varphi z}{1-z^2}\right]_2 \otimes (\varphi-1) - \left[\frac{1+(\varphi-1)z}{1-z^2}\right]_2 \otimes \varphi$$

$$+2[\varphi-z^{-1}]_2 \otimes z - 2[\varphi+z^{-1}]_2 \otimes z.$$

Now observe that

$$\left[\frac{1-\varphi z}{1-z^2}\right]_2 \otimes \varphi + \left[\frac{1-(\varphi-1)z}{1-z^2}\right]_2 \otimes \varphi - \left[\frac{1+\varphi z}{1-z^2}\right]_2 \otimes \varphi - \left[\frac{1+(\varphi-1)z}{1-z^2}\right]_2 \otimes \varphi$$

$$= [-\varphi z]_2 \otimes \varphi + [(1-\varphi)z]_2 \otimes \varphi - [\varphi z]_2 \otimes \varphi - [(\varphi-1)z]_2 \otimes \varphi$$

by five-term relations (5.28) and (5.29).

Therefore

$$\Delta = -[1-\varphi z]_2 \otimes (1-\varphi z) + [1-(\varphi-1)z]_2 \otimes (1-(\varphi-1)z)$$

$$+[1+\varphi z]_2 \otimes (1+\varphi z) - [1+(\varphi-1)z]_2 \otimes (1+(\varphi-1)z)$$

$$-[\varphi z]_2 \otimes (1-(\varphi-1)z) + [-\varphi z]_2 \otimes (1+(\varphi-1)z) + [(\varphi-1)z]_2 \otimes (1-\varphi z) - [(1-\varphi)z]_2 \otimes (1+\varphi z)$$

$$-\left[\frac{z-\varphi}{z^{-1}-\varphi}\right]_2 \otimes \frac{z-\varphi}{z^{-1}-\varphi} + \left[\frac{z-(\varphi-1)}{z^{-1}-(\varphi-1)}\right]_2 \otimes \frac{z-(\varphi-1)}{z^{-1}-(\varphi-1)}$$

$$+\left[\frac{z+\varphi}{z^{-1}+\varphi}\right]_2 \otimes \frac{z+\varphi}{z^{-1}+\varphi} - \left[\frac{z+(\varphi-1)}{z^{-1}+(\varphi-1)}\right]_2 \otimes \frac{z+(\varphi-1)}{z^{-1}+(\varphi-1)}$$

$$+[-\varphi z]_2 \otimes \varphi + [(1-\varphi)z]_2 \otimes \varphi - [\varphi z]_2 \otimes \varphi - [(\varphi-1)z]_2 \otimes \varphi$$

$$+2[\varphi - z^{-1}]_2 \otimes z - 2[\varphi + z^{-1}]_2 \otimes z.$$

Next,

$$\Delta = -[1-\varphi z]_2 \otimes (1-\varphi z) + [1-(\varphi-1)z]_2 \otimes (1-(\varphi-1)z)$$

$$+[1+\varphi z]_2 \otimes (1+\varphi z) - [1+(\varphi-1)z]_2 \otimes (1+(\varphi-1)z)$$

$$-\left[\frac{z-\varphi}{z^{-1}-\varphi}\right]_2 \otimes \frac{z-\varphi}{z^{-1}-\varphi} + \left[\frac{z-(\varphi-1)}{z^{-1}-(\varphi-1)}\right]_2 \otimes \frac{z-(\varphi-1)}{z^{-1}-(\varphi-1)}$$

$$+\left[\frac{z+\varphi}{z^{-1}+\varphi}\right]_2 \otimes \frac{z+\varphi}{z^{-1}+\varphi} - \left[\frac{z+(\varphi-1)}{z^{-1}+(\varphi-1)}\right]_2 \otimes \frac{z+(\varphi-1)}{z^{-1}+(\varphi-1)}$$

$$-[\varphi z]_2 \otimes (\varphi - z) + [-\varphi z]_2 \otimes (\varphi + z) + [(\varphi-1)z]_2 \otimes ((\varphi-1)-z) - [(1-\varphi)z]_2 \otimes ((\varphi-1)+z)$$

$$+2[\varphi - z^{-1}]_2 \otimes z - 2[\varphi + z^{-1}]_2 \otimes z.$$

Observe that

$$[(\varphi-1)z]_2 \otimes ((\varphi-1)-z) = [(\varphi-1)z]_2 \otimes ((\varphi-1)z) + [(\varphi-1)z]_2 \otimes (\varphi - z^{-1}).$$

Now conjugate the elements of the second term

$$= [(\varphi-1)z]_2\otimes((\varphi-1)z)+[(\varphi-1)z^{-1}]_2\otimes(\varphi-z) = [(\varphi-1)z]_2\otimes((\varphi-1)z)-[\varphi z]_2\otimes(\varphi-z).$$

Hence

$$-[\varphi z]_2\otimes(\varphi-z)+[-\varphi z]_2\otimes(\varphi+z)+[(\varphi-1)z]_2\otimes((\varphi-1)-z)-[(1-\varphi)z]_2\otimes((\varphi-1)+z)$$

$$+2[\varphi - z^{-1}]_2 \otimes z - 2[\varphi + z^{-1}]_2 \otimes z$$

$$= -2[\varphi z]_2 \otimes (\varphi - z) + 2[\varphi - z^{-1}]_2 \otimes z + 2[-\varphi z]_2 \otimes (\varphi + z) - 2[\varphi + z^{-1}]_2 \otimes z$$

$$+[(\varphi - 1)z]_2 \otimes ((\varphi - 1)z) - [(1 - \varphi)z]_2 \otimes ((1 - \varphi)z).$$

We want to simplify the term $-[\varphi z]_2 \otimes (\varphi - z) + [\varphi - z^{-1}]_2 \otimes z$. On the one hand,

$$-[\varphi z]_2 \otimes (\varphi - z) = -[\varphi z]_2 \otimes z + [1 - \varphi z]_2 \otimes (1 - \varphi z^{-1}).$$

On the other hand,

$$[\varphi - z^{-1}]_2 \otimes z = [\varphi - z]_2 \otimes z^{-1} = -[\varphi - z]_2 \otimes (\varphi - z) + [\varphi - z]_2 \otimes (1 - \varphi z^{-1}).$$

By the five term relation

$$[1 - \varphi z]_2 + [1 - \varphi]_2 + [\varphi - z]_2 - [1 - \varphi + z^{-1}]_2 + [(\varphi - 1)z]_2 = 0,$$

but $[1 - \varphi]_2$ correspond to zero in the differential since it is a constant real number. We then get

$$[1-\varphi z]_2\otimes(1-\varphi z^{-1})+[\varphi-z]_2\otimes(1-\varphi z^{-1}) = [1-\varphi+z^{-1}]_2\otimes(1-\varphi z^{-1})-[(\varphi-1)z]_2\otimes(1-\varphi z^{-1})$$

$$= [1-\varphi+z^{-1}]_2 \otimes (1-\varphi+z^{-1}) - [1-\varphi+z^{-1}]_2 \otimes (1-\varphi)$$

$$+[1-(\varphi-1)z]_2 \otimes (1-(\varphi-1)z) + [(\varphi-1)z]_2 \otimes ((\varphi-1)z).$$

Then

$$-[\varphi z]_2 \otimes (\varphi - z) + [\varphi - z^{-1}]_2 \otimes z = -[\varphi z]_2 \otimes z - [\varphi - z]_2 \otimes (\varphi - z) + [1-\varphi+z^{-1}]_2 \otimes (1-\varphi+z^{-1})$$

$$-[1-\varphi+z^{-1}]_2 \otimes (1-\varphi) + [1-(\varphi-1)z]_2 \otimes (1-(\varphi-1)z) + [(\varphi-1)z]_2 \otimes ((\varphi-1)z).$$

Analogously,

$$[-\varphi z]_2 \otimes (\varphi + z) - [\varphi + z^{-1}]_2 \otimes z = [-\varphi z]_2 \otimes z + [\varphi + z]_2 \otimes (\varphi + z) - [1-\varphi-z^{-1}]_2 \otimes (1-\varphi-z^{-1})$$

$$+[1-\varphi-z^{-1}]_2 \otimes (1-\varphi) - [1+(\varphi-1)z]_2 \otimes (1+(\varphi-1)z) - [(1-\varphi)z]_2 \otimes ((1-\varphi)z).$$

Thus

$$-2[\varphi z]_2 \otimes (\varphi - z) + 2[\varphi - z^{-1}]_2 \otimes z + 2[-\varphi z]_2 \otimes (\varphi + z) - 2[\varphi + z^{-1}]_2 \otimes z$$

$$+[(\varphi-1)z]_2 \otimes ((\varphi-1)z) - [(1-\varphi)z]_2 \otimes ((1-\varphi)z)$$

$$= -2[\varphi z]_2 \otimes \varphi z + 2[\varphi z]_2 \otimes \varphi - 2[\varphi - z]_2 \otimes (\varphi - z) + 2[1-\varphi+z^{-1}]_2 \otimes (1-\varphi+z^{-1})$$

$$-2[1-\varphi+z^{-1}]_2 \otimes (1-\varphi) + 2[1-(\varphi-1)z]_2 \otimes (1-(\varphi-1)z) + 3[(\varphi-1)z]_2 \otimes ((\varphi-1)z)$$

$$+2[-\varphi z]_2 \otimes (-\varphi z) - 2[-\varphi z]_2 \otimes \varphi + 2[\varphi + z]_2 \otimes (\varphi + z) - 2[1-\varphi-z^{-1}]_2 \otimes (1-\varphi-z^{-1})$$

$$+2[1-\varphi-z^{-1}]_2 \otimes (1-\varphi) - 2[1+(\varphi-1)z]_2 \otimes (1+(\varphi-1)z) - 3[(1-\varphi)z]_2 \otimes ((1-\varphi)z).$$

Next we will see that

$$[\varphi + z^{-1}]_2 \otimes \varphi - [\varphi - z^{-1}]_2 \otimes \varphi + [\varphi z]_2 \otimes \varphi - [-\varphi z]_2 \otimes \varphi$$

corresponds to zero in the differential.

Using that $|z| = 1$, the differential is

$$\frac{3\omega}{\log\varphi} = \log|1-\varphi-z|\,\mathrm{d}\log|\varphi+z| - \log|\varphi+z|\,\mathrm{d}\log|1-\varphi-z|$$

$$-\log|1-\varphi+z|\,\mathrm{d}\log|\varphi-z| + \log|\varphi-z|\,\mathrm{d}\log|1-\varphi+z|$$

$$-\log\varphi\,\mathrm{d}\log|1-\varphi z| + \log\varphi\,\mathrm{d}\log|1+\varphi z|$$

$$= \log|1+\varphi z|\,\mathrm{d}\log|\varphi+z| - \log\varphi\,\mathrm{d}\log|\varphi+z| - \log|\varphi+z|\,\mathrm{d}\log|1+\varphi z|$$

$$-\log|-1+\varphi z|\,\mathrm{d}\log|\varphi-z| + \log\varphi\,\mathrm{d}\log|\varphi-z| + \log|\varphi-z|\,\mathrm{d}\log|1-\varphi z|$$

$$-\log\varphi\,\mathrm{d}\log|z^{-1}-\varphi| + \log\varphi\,\mathrm{d}\log|z^{-1}+\varphi|$$

$$= \log|1+\varphi z|\,\mathrm{d}\log|\varphi z^{-1}+1| - \log|\varphi z^{-1}+1|\,\mathrm{d}\log|1+\varphi z|$$

$$-\log|-1+\varphi z|\,\mathrm{d}\log|\varphi z^{-1}-1| + \log|\varphi z^{-1}-1|\,\mathrm{d}\log|1-\varphi z|$$

$$= 0$$

Finally the primitive of Δ is

$$\Gamma = -[1-\varphi z]_3 + [1-(\varphi-1)z]_3 + [1+\varphi z]_3 - [1+(\varphi-1)z]_3$$

$$-\left[\frac{z-\varphi}{z^{-1}-\varphi}\right]_3 + \left[\frac{z-(\varphi-1)}{z^{-1}-(\varphi-1)}\right]_3 + \left[\frac{z+\varphi}{z^{-1}+\varphi}\right]_3 - \left[\frac{z+(\varphi-1)}{z^{-1}+(\varphi-1)}\right]_3$$

$$-2[\varphi z]_3 - 2[\varphi-z]_3 + 2[1-\varphi+z^{-1}]_3 + 2[1-(\varphi-1)z]_3 + 3[(\varphi-1)z]_3$$

$$+2[-\varphi z]_3 + 2[\varphi+z]_3 - 2[1-\varphi-z^{-1}]_3 - 2[1+(\varphi-1)z]_3 - 3[(1-\varphi)z]_3,$$

which is

$$= -[1-\varphi z]_3 + [1+\varphi z]_3$$

$$-\left[\frac{z-\varphi}{z^{-1}-\varphi}\right]_3 + \left[\frac{z-(\varphi-1)}{z^{-1}-(\varphi-1)}\right]_3 + \left[\frac{z+\varphi}{z^{-1}+\varphi}\right]_3 - \left[\frac{z+(\varphi-1)}{z^{-1}+(\varphi-1)}\right]_3$$

$$-2[\varphi z]_3 - 2[\varphi - z]_3 + 2[1-\varphi+z^{-1}]_3 + 3[1-(\varphi-1)z]_3 + 3[(\varphi-1)z]_3$$

$$+2[-\varphi z]_3 + 2[\varphi+z]_3 - 2[1-\varphi-z^{-1}]_3 - 3[1+(\varphi-1)z]_3 - 3[(1-\varphi)z]_3.$$

Now we use that

$$[x]_3 + [1-x]_3 + \left[1-\frac{1}{x}\right]_3 = [1]_3$$

We obtain

$$\Gamma = -4[1-\varphi z]_3 + 4[1+\varphi z]_3$$

$$-\left[\frac{z-\varphi}{z^{-1}-\varphi}\right]_3 + \left[\frac{z-(\varphi-1)}{z^{-1}-(\varphi-1)}\right]_3 + \left[\frac{z+\varphi}{z^{-1}+\varphi}\right]_3 - \left[\frac{z+(\varphi-1)}{z^{-1}+(\varphi-1)}\right]_3$$

$$-2[\varphi z]_3 - 2[\varphi - z]_3 + 2[1-\varphi+z^{-1}]_3 + 2[-\varphi z]_3 + 2[\varphi+z]_3 - 2[1-\varphi-z^{-1}]_3.$$

Let us note that the poles occur with $x = 1$, which easily implies $\Delta = 0$. Analogously, $\Delta = 0$ for $y = 1$ or $x = -1$ which correspond to the zeros.

We need to describe the integration path. If we let $x = \mathrm{e}^{2\mathrm{i}\alpha}$, with $-\frac{\pi}{2} \leq \alpha \leq \frac{\pi}{2}$, and $z = \mathrm{e}^{\mathrm{i}\beta}$, with $-\frac{\pi}{2} \leq \beta \leq \frac{\pi}{2}$, this is half the path, since there are two solutions for each z. Then condition (5.27) translates into

$$\tan\alpha = 2\sin\beta.$$

The boundaries of the above condition are meet when $\sin\beta = \pm 1$. In other words, we need to integrate with z between -1 and 1 and multiply the final result by two.

Then

$$4\pi^2 m(P) = 2\Gamma\,|_{-1}^{1}$$

$$= 2(2(-4\mathcal{L}_3(1-\varphi) + 4\mathcal{L}_3(1+\varphi) - 2\mathcal{L}_3(\varphi) + 2\mathcal{L}_3(-\varphi) - 2\mathcal{L}_3(\varphi-1) + 2\mathcal{L}_3(\varphi+1)$$

$$+2\mathcal{L}_3(2-\varphi) - 2\mathcal{L}_3(-\varphi)))$$

$$= 4(-4\mathcal{L}_3(1-\varphi) + 6\mathcal{L}_3(1+\varphi) - 2\mathcal{L}_3(\varphi) - 2\mathcal{L}_3(\varphi-1) + 2\mathcal{L}_3(2-\varphi)).$$

Now we use that

$$[1-\varphi]_3 = [-\varphi]_3 \qquad [\varphi-1]_3 = [\varphi]_3,$$

in order to obtain

$$4\pi^2 m(P) = 24\mathcal{L}_3(1+\varphi) - 16\mathcal{L}_3(\varphi) - 16\mathcal{L}_3(-\varphi) + 8\mathcal{L}_3(2-\varphi).$$

Now we use

$$[\varphi-1]_3 + [2-\varphi]_3 + \left[1 - \frac{1}{\varphi-1}\right]_3 = [1]_3$$

$$[\varphi]_3 + [2-\varphi]_3 + [-\varphi]_3 = [1]_3,$$

and

$$[-\varphi]_3 + [1+\varphi]_3 + \left[1 + \frac{1}{\varphi}\right]_3 = [1]_3$$

$$[-\varphi]_3 + [1+\varphi]_3 + [\varphi]_3 = [1]_3.$$

Thus we get

$$4\pi^2 m(P) = 32\mathcal{L}_3(1) - 48\mathcal{L}_3(\varphi) - 48\mathcal{L}_3(-\varphi).$$

But

$$4[\varphi]_3 + 4[-\varphi]_3 = [\varphi^2]_3 = [\varphi+1]_3 = [1]_3 - [\varphi]_3 - [-\varphi]_3$$

implies that

$$[\varphi]_3 + [-\varphi]_3 = \frac{1}{5}[1]_3.$$

Finally we recover Condon's result

$$m(P) = \frac{28}{5\pi^2}\zeta(3).$$

5.5 A few words about the four-variable case

What would the situation be in four variables? In this section we are going to compute the differentials for this case, however, we will not say anything about the integration domain. We start with a differential which is analogous to the ones we had before:

$$\eta(x,y,w,z) = \frac{1}{4}\left(-\log|z|\,\mathrm{Im}\left(\frac{\mathrm{d}x}{x}\wedge\frac{\mathrm{d}y}{y}\wedge\frac{\mathrm{d}w}{w}\right) + \log|w|\,\mathrm{Im}\left(\frac{\mathrm{d}x}{x}\wedge\frac{\mathrm{d}y}{y}\wedge\frac{\mathrm{d}z}{z}\right)\right.$$

$$-\log|y|\,\mathrm{Im}\left(\frac{\mathrm{d}x}{x}\wedge\frac{\mathrm{d}w}{w}\wedge\frac{\mathrm{d}z}{z}\right) + \log|x|\,\mathrm{Im}\left(\frac{\mathrm{d}y}{y}\wedge\frac{\mathrm{d}w}{w}\wedge\frac{\mathrm{d}z}{z}\right)$$

$$\left.+\eta(x,y,w)\wedge\ \mathrm{d}\arg z - \eta(x,y,z)\wedge\ \mathrm{d}\arg w + \eta(x,w,z)\wedge\ \mathrm{d}\arg y - \eta(y,w,z)\wedge\ \mathrm{d}\arg x\right) \tag{5.32}$$

where $\eta(x,y,z)$ denotes the differential previously defined for three variables.

We may do the same procedure as in the previous cases. From the point of view of the differentials, our task is straightforward. As one could expect,

$$\mathrm{d}\eta(x,y,w,z) = \mathrm{Im}\left(\frac{\mathrm{d}x}{x}\wedge\frac{\mathrm{d}y}{y}\wedge\frac{\mathrm{d}w}{w}\wedge\frac{\mathrm{d}z}{z}\right).$$

We proceed as always, first we observe that

Proposition 32

$$\eta(x,1-x,y,w) = \ \mathrm{d}\omega(x,y,w) \tag{5.33}$$

where

$$\omega(x,y,w) = D(x)\left(\frac{1}{3}\,\mathrm{d}\log|y|\,\mathrm{d}\log|w| - \,\mathrm{d}\arg y\,\mathrm{d}\arg w\right)$$

$$+\frac{1}{3}\eta(y,w)\left(\log|x|\,\mathrm{d}\log|1-x| - \log|1-x|\,\mathrm{d}\log|x|\right). \tag{5.34}$$

PROOF. Write

$$\eta(x,1-x,y,w) = \frac{1}{4}\left(-\log|1-x|\,\mathrm{Im}\left(\frac{\mathrm{d}x}{x}\wedge\frac{\mathrm{d}y}{y}\wedge\frac{\mathrm{d}w}{w}\right) + \log|x|\,\mathrm{Im}\left(\frac{\mathrm{d}(1-x)}{1-x}\wedge\frac{\mathrm{d}y}{y}\wedge\frac{\mathrm{d}w}{w}\right)\right.$$

$$+\eta(x,1-x,y)\wedge\,\mathrm{d}\arg w - \eta(x,1-x,w)\wedge\,\mathrm{d}\arg y +$$

$$\left.\eta(x,y,w)\wedge\,\mathrm{d}\arg(1-x) - \eta(1-x,y,w)\wedge\,\mathrm{d}\arg x\right).$$

We keep using the notation from the three variable case. Now we use that

$$\frac{\mathrm{d}x}{x}\wedge\frac{\mathrm{d}(1-x)}{1-x} = 0 \Rightarrow\,\mathrm{d}\log|x|\,\mathrm{d}\arg(1-x) + \,\mathrm{d}\arg x\log|1-x| = 0$$

in order to conclude

$$= \frac{1}{4}\left(\,\mathrm{d}\eta(y,w)(\log|x|\,\mathrm{d}\log|1-x| - \log|1-x|\,\mathrm{d}\log|x|) + \eta(x,1-x)\,\mathrm{Re}\left(\frac{\mathrm{d}y}{y}\wedge\frac{\mathrm{d}w}{w}\right)\right.$$

$$+\,\mathrm{d}\omega(x,y)\wedge\,\mathrm{d}\arg w - \,\mathrm{d}\omega(x,w)\wedge\,\mathrm{d}\arg y$$

$$+\eta(x,1-x)\left(\frac{1}{3}\,\mathrm{d}\log|y|\,\mathrm{d}\log|w| - \,\mathrm{d}\arg y\,\mathrm{d}\arg w\right)$$

$$+2\eta(w,y)\,\mathrm{d}\log|x|\wedge\,\mathrm{d}\log|1-x|$$

$$= \frac{1}{4}\,\mathrm{d}\left(\eta(y,w)(\log|x|\,\mathrm{d}\log|1-x| - \log|1-x|\,\mathrm{d}\log|x|) + D(x)\,\mathrm{Re}\left(\frac{\mathrm{d}y}{y}\wedge\frac{\mathrm{d}w}{w}\right)\right)$$

$$+\,\mathrm{d}\left(\omega(x,y)\wedge\,\mathrm{d}\arg w - \omega(x,w)\wedge\,\mathrm{d}\arg y\right)$$

$$+\,\mathrm{d}\left(D(x)\left(\frac{1}{3}\,\mathrm{d}\log|y|\,\mathrm{d}\log|w| - \,\mathrm{d}\arg y\,\mathrm{d}\arg w\right)\right)$$

and we can see that this is equal to $\mathrm{d}\omega(x,y,w)$. □

If we were to integrate the next step, we would need to use,

Proposition 33

$$\omega(x,x,y) = \mathrm{d}\mu(x,y) \tag{5.35}$$

with

$$\mu(x,y) = \mathcal{L}_3(x)\ \mathrm{d}\arg y - \frac{1}{3}D(x)\log|y|\ \mathrm{d}\log|x|. \tag{5.36}$$

PROOF. We have

$$\omega(x,x,y) = D(x)\left(\frac{1}{3}\ \mathrm{d}\log|x|\ \mathrm{d}\log|y| - \ \mathrm{d}\arg x\ \mathrm{d}\arg y\right)$$

$$+\frac{1}{3}\eta(x,y)\left(\log|x|\ \mathrm{d}\log|1-x| - \log|1-x|\ \mathrm{d}\log|x|\right).$$

□

Finally,

Proposition 34

$$\mu(x,x) = \mathrm{d}\mathcal{L}_4(x). \tag{5.37}$$

PROOF. Recall that

$$\mathcal{L}_4(x) = \mathrm{Im}\left(\mathrm{Li}_4(x) - \log|x|\mathrm{Li}_3(x) + \frac{1}{3}\log^2|x|\mathrm{Li}_2(x)\right).$$

Then

$$\mathrm{d}\mathcal{L}_4(x) = \mathrm{Im}\left(\mathrm{Li}_3(x)\frac{\mathrm{d}x}{x} - \ \mathrm{d}\log|x|\mathrm{Li}_3(x) - \log|x|\mathrm{Li}_2(x)\frac{\mathrm{d}x}{x}\right.$$

$$\left.+\frac{2}{3}\log|x|\ \mathrm{d}\log|x|\mathrm{Li}_2(x) + \frac{1}{3}\log^2|x|\mathrm{Li}_1(x)\frac{\mathrm{d}x}{x}\right)$$

$$= \mathrm{Im}(\mathrm{Li}_3(x))\ \mathrm{d}\log|x| + \mathrm{Re}(\mathrm{Li}_3(x))\ \mathrm{d}\arg x - \ \mathrm{d}\log|x|\ \mathrm{Im}(\mathrm{Li}_3(x)) - \log|x|\ \mathrm{Im}(\mathrm{Li}_2(x))\ \mathrm{d}\log|x|$$

$$-\log|x|\,\mathrm{Re}(\mathrm{Li}_2(x))\,\mathrm{d}\arg x+\frac{2}{3}\log|x|\,\mathrm{d}\log|x|\,\mathrm{Im}(\mathrm{Li}_2(x))+\frac{1}{3}\log^2|x|\,\mathrm{Im}(\mathrm{Li}_1(x))\,\mathrm{d}\log|x|$$

$$+\frac{1}{3}\log^2|x|\,\mathrm{Re}(\mathrm{Li}_1(x))\,\mathrm{d}\arg x$$

$$=\mathrm{Re}(\mathrm{Li}_3(x))\,\mathrm{d}\arg x-\log|x|\,\mathrm{Re}(\mathrm{Li}_2(x))\,\mathrm{d}\arg x+\frac{1}{3}\log^2|x|\,\mathrm{Re}(\mathrm{Li}_1(x))\,\mathrm{d}\arg x$$

$$-\frac{1}{3}\log|x|\,\mathrm{d}\log|x|(\mathrm{Im}(\mathrm{Li}_2(x))-\log|x|\,\mathrm{Im}(\mathrm{Li}_1(x)))$$

$$=\mu(x,x).$$

□

The K-theory conditions will be addressed in section 5.8 where we will describe Zagier's construction of Bloch groups in general and Goncharov's polylogarithmic motivic complexes.

However, we do not have a good method to deal with the integration domains in more than three variables.

5.6 Examples

In spite of the fact that we do not know how to deal with the integration domains, we may still carry out the algebraic integration for a couple of examples of four-variable polynomials.

5.6.1 $\mathrm{Res}_{\{(0,0),(1,0),(0,1)\}}$

We will now study the case of $\mathrm{Res}_{\{(0,0),(1,0),(0,1)\}}$, which was first computed in [18]. This Mahler measure problem may be reduced to compute the Mahler measure of

$$(1-x)(1-y)-(1-w)(1-z).$$

First we have

$$x \wedge y \wedge w \wedge z = -\frac{1}{x} \wedge y \wedge w \wedge z = -\frac{1}{x} \wedge y \left(1 - \frac{1}{x}\right) \wedge w \wedge z + \frac{1}{x} \wedge \left(1 - \frac{1}{x}\right) \wedge w \wedge z.$$

Now the first term is

$$-\frac{1}{x} \wedge y \left(1 - \frac{1}{x}\right) \wedge w \wedge z = \frac{x}{w} \wedge \left(y - \frac{y}{x}\right) \wedge w \wedge z$$

$$= \frac{x}{w}\left(1 - y + \frac{y}{x}\right) \wedge \left(y - \frac{y}{x}\right) \wedge w \wedge z - \left(1 - y + \frac{y}{x}\right) \wedge \left(y - \frac{y}{x}\right) \wedge w \wedge z.$$

Next, we use the formula for z as a function on the other variables:

$$\frac{x}{w}\left(1 - y + \frac{y}{x}\right) \wedge \left(y - \frac{y}{x}\right) \wedge w \wedge z = \frac{x + y - xy}{w} \wedge \left(y - \frac{y}{x}\right) \wedge w \wedge \frac{-w + x + y - xy}{w(1 - w)}$$

$$= \frac{x + y - xy}{w} \wedge \left(y - \frac{y}{x}\right) \wedge w \wedge \left(1 - \frac{x + y - xy}{w}\right) - \frac{x + y - xy}{w} \wedge \left(y - \frac{y}{x}\right) \wedge w \wedge (1 - w).$$

Note that

$$-(x + y - xy) \wedge \left(y - \frac{y}{x}\right) \wedge w \wedge (1 - w)$$

$$= -\left(1 - y + \frac{y}{x}\right) \wedge \left(y - \frac{y}{x}\right) \wedge w \wedge (1 - w) - x \wedge \left(y - \frac{y}{x}\right) \wedge w \wedge (1 - w).$$

Hence

$$x \wedge y \wedge w \wedge z = \frac{1}{x} \wedge \left(1 - \frac{1}{x}\right) \wedge w \wedge z + \left(y - \frac{y}{x}\right) \wedge \left(1 - y + \frac{y}{x}\right) \wedge w \wedge z(1 - w)$$

$$+ \frac{x + y - xy}{w} \wedge \left(1 - \frac{x + y - xy}{w}\right) \wedge \left(y - \frac{y}{x}\right) \wedge w - w \wedge (1 - w) \wedge x \wedge \left(y - \frac{y}{x}\right).$$

Then we get an expression for Δ,

$$\Delta = \left[\frac{1}{x}\right]_2 \otimes w \wedge z + \left[y - \frac{y}{x}\right]_2 \otimes w \wedge z(1 - w)$$

$$+\left[\frac{x+y-xy}{w}\right]_2 \otimes \left(y-\frac{y}{x}\right) \wedge w - [w]_2 \otimes x \wedge \left(y-\frac{y}{x}\right)$$

$$= -[x]_2 \otimes w \wedge z + \left[y-\frac{y}{x}\right]_2 \otimes w \wedge z(1-w)$$

$$-\left[z-\frac{z}{w}\right]_2 \otimes \left(y-\frac{y}{x}\right) \wedge w - [w]_2 \otimes x \wedge \left(y-\frac{y}{x}\right).$$

Δ will be integrated under the following condition:

$$\left(1-\frac{(1-x)(1-y)}{1-w}\right)\left(1-\frac{(1-x^{-1})(1-y^{-1})}{1-w^{-1}}\right)=1,$$

which can be simplified as

$$x=1, \quad y=1, \quad w=x, \quad \text{or} \quad w=y.$$

The above conditions correspond to two pyramids in the torus $\mathbb{T}^3$, as seen in picture 5.6.1. We will make the computations over the lower pyramid and then multiply the result by 2.

When $x=1$, in this case, $w=1$ or $z=1$. If $w=1$, $\Delta=0$.

If $z=1$,

$$\Delta = -\left[1-\frac{1}{w}\right]_2 \otimes y \wedge w,$$

yielding

$$\Gamma = [w]_3 \otimes y.$$

Γ will be integrated in the boundary, which is $y=1$,$w=1$ and $y=w$.

If $y=1$, $\Gamma=0$. If $w=1$,

$$\Gamma = [1]_3 \otimes y,$$

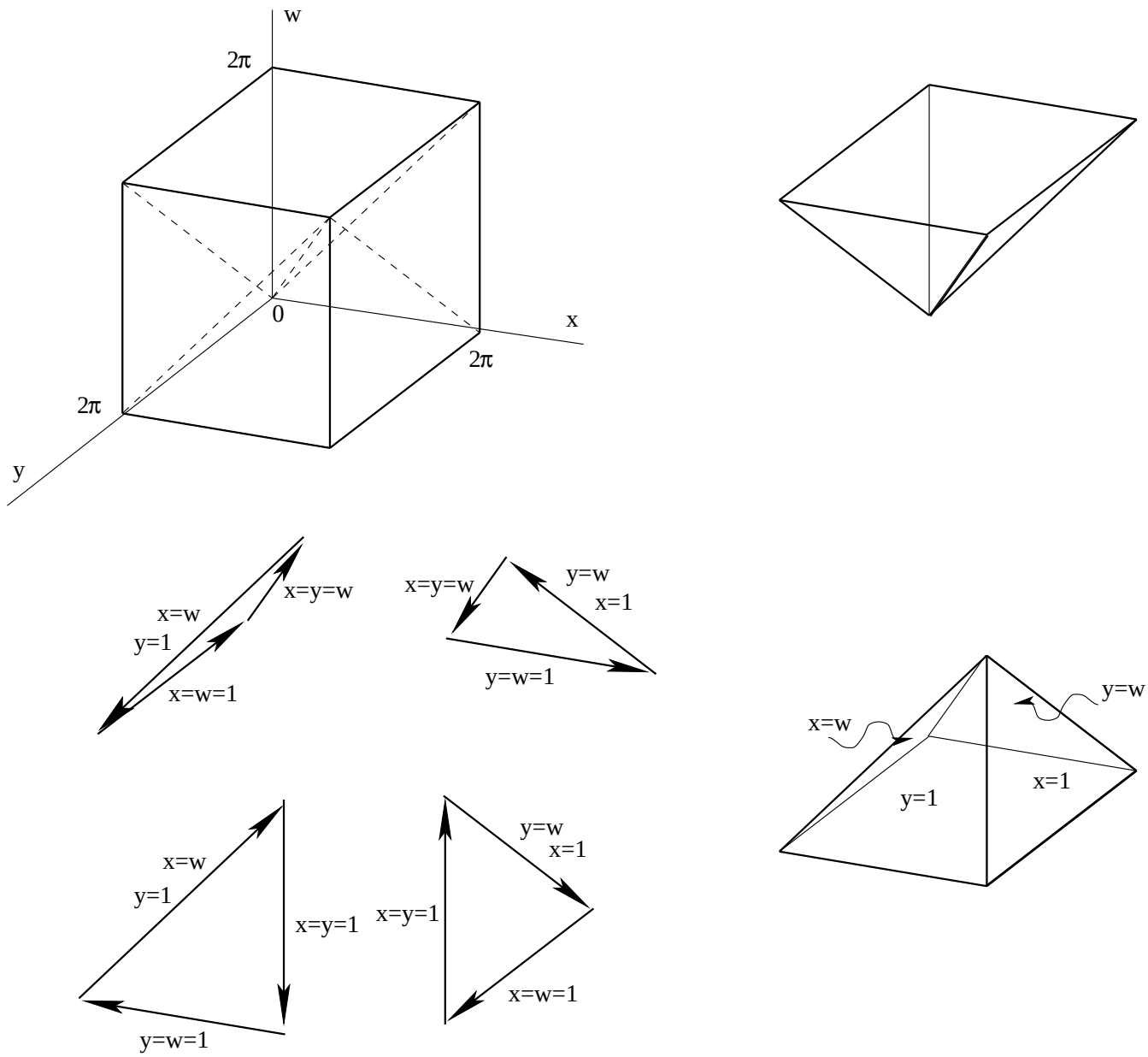

Figure 5.7: Integration set for $\mathrm{Res}_{\{(0,0),(1,0),(0,1)\}}$.

which yields $2\pi\zeta(3)$.

If $y = w$,

$$\Gamma = [y]_3 \otimes y,$$

whose integral is zero.

When $y = 1$, in this case, $w = 1$ or $z = 1$. If $w = 1$, $\Delta = 0$.

If $z = 1$,

$$\Delta = \left[1 - \frac{1}{x}\right]_2 \otimes w \wedge (1 - w) - \left[1 - \frac{1}{w}\right]_2 \otimes \left(1 - \frac{1}{x}\right) \wedge w - [w]_2 \otimes x \wedge \left(1 - \frac{1}{x}\right).$$

Only the term in the middle yields a non zero differential form. In fact, the term in the middle yields

$$\Gamma = [w]_3 \otimes \left(1 - \frac{1}{x}\right).$$

Γ will be integrated in the boundary which is $x = 1$, $w = 1$ and $x = w$.

If $x = 1$, $\Gamma = 0$. If $w = 1$,

$$\Gamma = [1]_3 \otimes \left(1 - \frac{1}{x}\right).$$

This integration is equal to $\pi\zeta(3)$.

If $x = w$,

$$\Gamma = [x]_3 \otimes \left(1 - \frac{1}{x}\right),$$

which integrates to zero.

When $w = x$, (in this case, $z = y$ unless $x = 1$).

$$\Delta = -[x]_2 \otimes x \wedge y + \left[y - \frac{y}{x}\right]_2 \otimes x \wedge y(1 - x)$$

$$- \left[y - \frac{y}{x}\right]_2 \otimes \left(y - \frac{y}{x}\right) \wedge x - [x]_2 \otimes x \wedge \left(y - \frac{y}{x}\right).$$

Then

$$\Gamma = -2[x]_3 \otimes y - 2\left[y - \frac{y}{x}\right]_3 \otimes x - [x]_3 \otimes \left(1 - \frac{1}{x}\right).$$

Now Γ is to be integrated in the boundary, which is $x = 1$, $y = 1$ and $x = y$ (see picture 5.6.1).

If $x = 1$,

$$\Gamma = -2[1]_3 \otimes y,$$

which gives $4\pi\zeta(3)$.

If $y = 1$,

$$\Gamma = -2\left[1 - \frac{1}{x}\right]_3 \otimes x - [x]_3 \otimes \left(1 - \frac{1}{x}\right).$$

Now use that

$$[x]_3 + [1 - x]_3 + \left[1 - \frac{1}{x}\right]_3 = [1]_3$$

and the fact that $|x| = 1$ to conclude

$$-2\left[1 - \frac{1}{x}\right]_3 \otimes x = [x]_3 \otimes x - [1]_3 \otimes x.$$

The total integration is $2\pi\zeta(3)$.

If $x = y$,

$$\Gamma = -2[x]_3 \otimes x - 2\,[x - 1]_3 \otimes x - [x]_3 \otimes \left(1 - \frac{1}{x}\right)$$

which gives $-2\int [x - 1]_3 \otimes x$ (we will not need to compute this integral for the final result).

When $w = y$, (in this case, $z = x$ unless $y = 1$),

$$\Delta = -[x]_2 \otimes y \wedge x + \left[y - \frac{y}{x}\right]_2 \otimes y \wedge \left(x - \frac{x}{y}\right)$$

$$-\left[x-\frac{x}{y}\right]_2\otimes\left(y-\frac{y}{x}\right)\wedge y-[y]_2\otimes x\wedge\left(y-\frac{y}{x}\right)$$

$$=[x]_2\otimes x\wedge y+[y]_2\otimes y\wedge x-[y]_2\otimes x\wedge\left(1-\frac{1}{x}\right)$$

$$-\left[y-\frac{y}{x}\right]_2\otimes\left(x-\frac{x}{y}\right)\wedge y-\left[x-\frac{x}{y}\right]_2\otimes\left(y-\frac{y}{x}\right)\wedge y.$$

By the five-term relation,

$$\left[1-\frac{1}{x}\right]_2+[y]_2+\left[1-y\left(1-\frac{1}{x}\right)\right]_2+\left[\frac{1}{x+y-xy}\right]_2+\left[\frac{1-y}{1-y+\frac{y}{x}}\right]_2=0$$

$$[x]_2+[y]_2-\left[y-\frac{y}{x}\right]_2-[x+y-xy]_2-\left[x-\frac{x}{y}\right]_2=0.$$

Then we obtain

$$\Delta=[x]_2\otimes x\wedge y+[y]_2\otimes y\wedge x-[y]_2\otimes x\wedge\left(1-\frac{1}{x}\right)$$

$$-[x]_2\otimes\left(x-\frac{x}{y}\right)\wedge y-[y]_2\otimes\left(x-\frac{x}{y}\right)\wedge y+[x+y-xy]_2\otimes\left(x-\frac{x}{y}\right)\wedge y+\left[x-\frac{x}{y}\right]_2\otimes\left(x-\frac{x}{y}\right)\wedge y$$
$$-[x]_2\otimes\left(y-\frac{y}{x}\right)\wedge y-[y]_2\otimes\left(y-\frac{y}{x}\right)\wedge y+[x+y-xy]_2\otimes\left(y-\frac{y}{x}\right)\wedge y+\left[y-\frac{y}{x}\right]_2\otimes\left(y-\frac{y}{x}\right)\wedge y$$

$$=[x]_2\otimes x\wedge y+[y]_2\otimes y\wedge x-[y]_2\otimes x\wedge\left(1-\frac{1}{x}\right)$$

$$-[x]_2\otimes(1-x)(1-y)\wedge y-[y]_2\otimes(1-x)(1-y)\wedge y+\left[x-\frac{x}{y}\right]_2\otimes\left(x-\frac{x}{y}\right)\wedge y$$
$$+[x+y-xy]_2\otimes(1-x)(1-y)\wedge y+\left[y-\frac{y}{x}\right]_2\otimes\left(y-\frac{y}{x}\right)\wedge y.$$

Now

$$-[y]_2 \otimes x \wedge \left(1 - \frac{1}{x}\right) - [x]_2 \otimes (1-y) \wedge y$$

is zero in the differential form.

Therefore,

$$\Gamma = [x]_3 \otimes y + [y]_3 \otimes x + [1-x]_3 \otimes y + [y]_3 \otimes (1-x)(1-y) + \left[x - \frac{x}{y}\right]_3 \otimes y$$

$$-[(1-x)(1-y)]_3 \otimes y + \left[y - \frac{y}{x}\right]_3 \otimes y.$$

Γ will be integrated in the boundary, which is $x = 1$, $y = 1$ and $x = y$.

If $x = 1$,

$$\Gamma = [1]_3 \otimes y + [y]_3 \otimes (1-y) + \left[1 - \frac{1}{y}\right]_3 \otimes y$$

whose integral is $3\pi\zeta(3)$.

If $y = 1$,

$$\Gamma = [1]_3 \otimes x + [1]_3 \otimes (1-x)$$

which gives $3\pi\zeta(3)$.

If $x = y$,

$$\Gamma = 2[x]_3 \otimes x + [1-x]_3 \otimes x + 2[x]_3 \otimes (1-x) + 2\,[x-1]_3 \otimes x - [(1-x)^2]_3 \otimes x$$

$$= 2[x]_3 \otimes x - 3[1-x]_3 \otimes x + 2[x]_3 \otimes (1-x) - 2\,[x-1]_3 \otimes x,$$

which yields $3\pi\zeta(3) + 2\int [x-1]_3 \otimes x$.

The poles are with $w = 1$ but $\Delta = 0$ in this case. On the other hand, if $z = 0$, then $w = x + y - xy$. But $|w| = 1$ implies that $x = 1$, $y = 1$ or $x = -y$. In

the first two cases $\Delta = 0$. In the third case

$$\Delta = -[x]_2 \otimes x^2 \wedge (1 - x^2) - [x^2]_2 \otimes x \wedge (1 - x),$$

which corresponds to zero if $|x| = 1$.

Thus,

$$8\pi^3 m(P) = 36\pi\zeta(3).$$

Finally,

$$m(P) = \frac{9}{2\pi^2}\zeta(3).$$

5.6.2 An example from section 3.2

We will now study the case of

$$z = \frac{(1 + x_1)(1 + x_2) + 2(x_1 + x_2)y}{(1 - x_1)(1 - x_2)},$$

which was first computed in [31].

For this case,

$$x_1 \wedge x_2 \wedge y \wedge z = x_1 \wedge x_2 \wedge (2y) \wedge z - x_1 \wedge x_2 \wedge 2 \wedge z.$$

$$x_1 \wedge x_2 \wedge (2y) \wedge z = x_1 \wedge x_2 \wedge (2y) \wedge \left(1 + \frac{2(x_1 + x_2)y}{(1 + x_1)(1 + x_2)}\right) - x_1 \wedge x_2 \wedge (2y) \wedge \left(\frac{1 - x_1}{1 + x_1}\right)\left(\frac{1 - x_2}{1 + x_2}\right).$$

Now we write

$$x_1 \wedge x_2 \wedge (2y) \wedge \left(1 + \frac{2(x_1 + x_2)y}{(1 + x_1)(1 + x_2)}\right) = x_1 \wedge x_2 \wedge \frac{2(x_1 + x_2)y}{(1 + x_1)(1 + x_2)} \wedge \left(1 + \frac{2(x_1 + x_2)y}{(1 + x_1)(1 + x_2)}\right)$$

$$- x_1 \wedge x_2 \wedge (x_1 + x_2) \wedge \left(1 + \frac{2(x_1 + x_2)y}{(1 + x_1)(1 + x_2)}\right) + x_1 \wedge x_2 \wedge (1 + x_1) \wedge \left(1 + \frac{2(x_1 + x_2)y}{(1 + x_1)(1 + x_2)}\right)$$

$$+x_1 \wedge x_2 \wedge (1+x_2) \wedge \left(1 + \frac{2(x_1+x_2)y}{(1+x_1)(1+x_2)}\right).$$

Then we need to integrate

$$\Delta = -[x_1]_2 \otimes x_2 \wedge (2y) + [x_2]_2 \otimes x_1 \wedge (2y) + [-x_1]_2 \otimes x_2 \wedge (2y) - [-x_2]_2 \otimes x_1 \wedge (2y)$$

$$+ \left[-\frac{2(x_1+x_2)y}{(1+x_1)(1+x_2)}\right]_2 \otimes x_1 \wedge x_2 + \left[-\frac{x_1}{x_2}\right]_2 \otimes x_2 \wedge \left(1 + \frac{2(x_1+x_2)y}{(1+x_1)(1+x_2)}\right)$$

$$-[-x_1]_2 \otimes x_2 \wedge \left(1 + \frac{2(x_1+x_2)y}{(1+x_1)(1+x_2)}\right) + [-x_2]_2 \otimes x_1 \wedge \left(1 + \frac{2(x_1+x_2)y}{(1+x_1)(1+x_2)}\right).$$

We perform the second integration under the condition

$$\frac{((1+x_1)(1+x_2) + 2(x_1+x_2)y)((1+x_1^{-1})(1+x_2^{-1}) + 2(x_1^{-1}+x_2^{-1})y^{-1})}{(1-x_1)(1-x_2)(1-x_1^{-1})(1-x_2^{-1})} = 1,$$

from where

$$y = -1, \quad x_1 = -1, \quad x_2 = -1, \quad \text{or} \quad x_1 = -x_2.$$

The integration set is described by figure 5.6.2.

If $y = -1$ or $x_2 = -1$, we get $\Delta = 0$ (taking into account that the variables have absolute value equal to 1 in the domain of integration). If $x_1 = -1$,

$$\Delta = \left[\frac{1}{x_2}\right]_2 \otimes x_2 \wedge \frac{2y(1-x_2)}{1+x_2},$$

which corresponds to integrate

$$\Gamma = -[x_2]_3 \otimes y$$

in the boundary: $y = -1$ and $x_2 = \pm 1$. We get $\frac{7\pi}{2}\zeta(3)$.

If $x_1 = -x_2$,

$$\Delta = -2[x_1]_2 \otimes x_1 \wedge (2y) + 2[-x_1]_2 \otimes x_1 \wedge (2y,$$

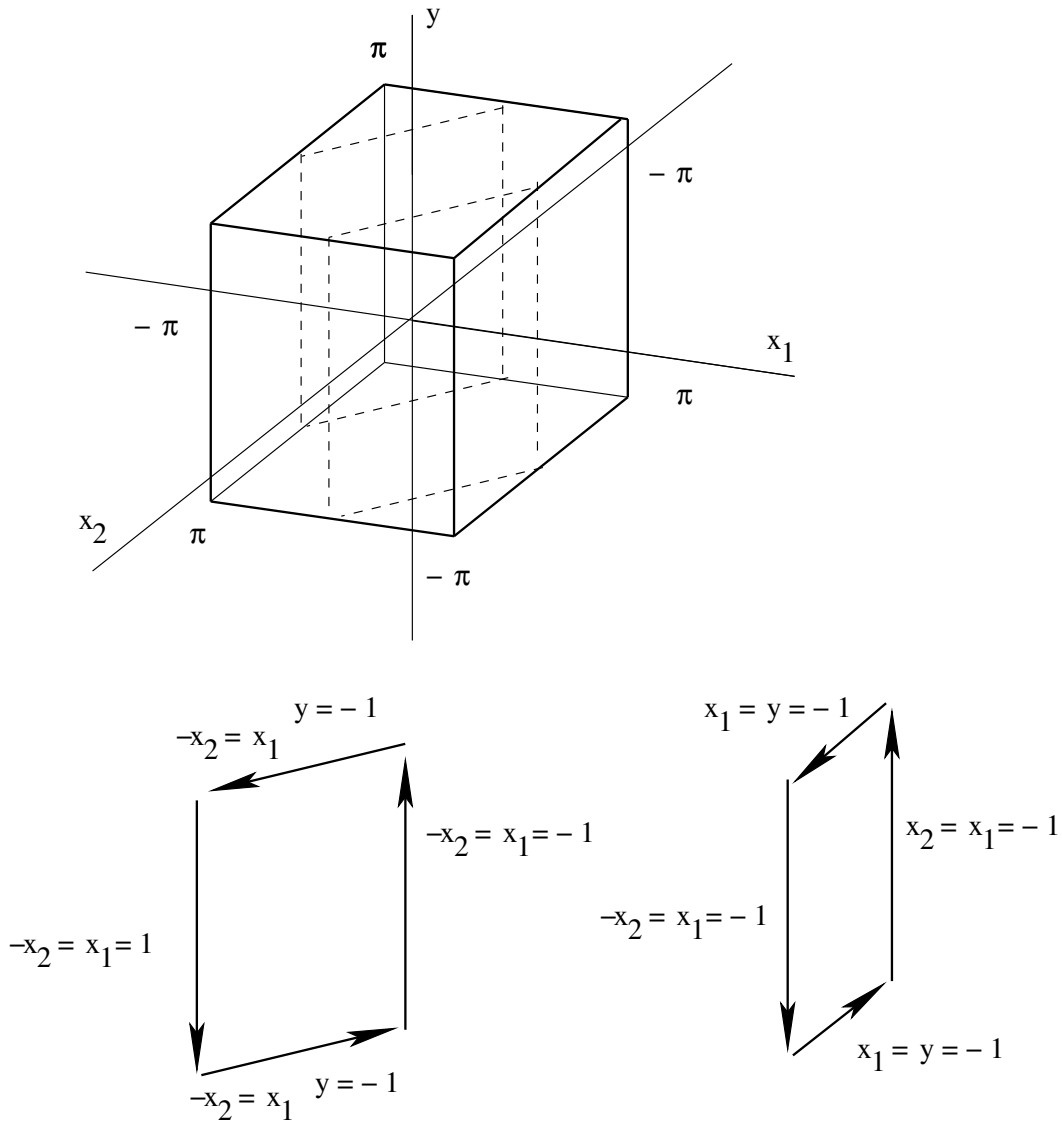

Figure 5.8: Integration set for $(1+x_1)(1+x_2)+2(x_1+x_2)y-(1-x_1)(1-x_2)z$.

which correspond to integrate

$$\Gamma = -2[x_1]_3 \otimes y + 2[-x_1]_3 \otimes y$$

in the boundary $y = -1$ and $x_1 = \pm 1$. We get $14\pi\zeta(3)$.

If $z = 0$, it is easy to see that y must be real and then $y = \pm 1$. In both cases $\Delta = 0$.

The poles are with $x_1 = 1$, $x_2 = 1$. When $x_2 = 1$, $\Delta = 0$, but for $x_1 = 1$,

$$\Delta = \left[-\frac{1}{x_2}\right]_2 \otimes x_2 \wedge (1 + y),$$

which corresponds to integrate

$$\Gamma = -[-x_2]_3 \otimes (1 + y)$$

which is the same as integrating $-\frac{1}{2}[-x_2]_3 \otimes y$, yielding $\frac{7\pi}{4}\zeta(3)$ in each side. There are four sides like that, and it is necessary to keep track of their orientations in order to decide if these terms are supposed to add or substract to the final sum. It seems that they all add, but we have been unable to find a satisfactory explanation to this fact.

Summing everything,

$$8\pi^3 m(P) = 42\pi\zeta(3) - \int \eta(2, x_1, x_2, z).$$

We now need to compute the integral of $\eta(2, x_1, x_2, z)$. Using that $z(1 - x_1)(1 - x_2) = (1 + x_1)(1 + x_2) + 2(x_1 + x_2)y$,

$$\frac{\mathrm{d}z}{z} = * \, \mathrm{d}x_1 + * \, \mathrm{d}x_2 + \frac{2(x_1 + x_2)}{z(1 - x_1)(1 - x_2)} \, \mathrm{d}y.$$

Since $|x_1| = |x_2| = 1$,

$$\mathrm{d}\arg x_1 \,\mathrm{d}\arg x_2 \,\mathrm{d}\arg z = -\operatorname{Im}\left(\frac{\mathrm{d}x_1}{x_1} \wedge \frac{\mathrm{d}x_2}{x_2} \wedge \frac{\mathrm{d}z}{z}\right)$$

$$= -\operatorname{Im}\left(\frac{\mathrm{d}x_1}{x_1} \wedge \frac{\mathrm{d}x_2}{x_2} \wedge \frac{2(x_1+x_2)}{z(1-x_1)(1-x_2)}\,\mathrm{d}y\right).$$

Let us define

$$\alpha := \frac{(1+x_1)(1+x_2)}{2(x_1+x_2)y}$$

then $|\alpha| \leq 1$ in $S_1 = \{x_1, x_2 \mid \arg x_1 \cdot \arg x_2 \geq 0\}$ and vice versa in the complement S_2 of S_1 in the domain.

Then

$$\int \eta(2, x_1, x_2, z) = -\log 2 \int \mathrm{d}\arg x_1 \,\mathrm{d}\arg x_2 \,\mathrm{d}\arg z$$

$$= -\operatorname{Im}\left(\log 2 \int \frac{2(x_1+x_2)y}{2(x_1+x_2)y + (1+x_1)(1+x_2)} \frac{\mathrm{d}x_1}{x_1}\frac{\mathrm{d}x_2}{x_2}\frac{\mathrm{d}y}{y}\right)$$

$$= -\operatorname{Im}\left(\log 2 \int_{S_1} \frac{1}{1+\alpha}\frac{\mathrm{d}x_1}{x_1}\frac{\mathrm{d}x_2}{x_2}\frac{\mathrm{d}y}{y}\right) - \operatorname{Im}\left(\log 2 \int_{S_2} \frac{\alpha^{-1}}{1+\alpha^{-1}}\frac{\mathrm{d}x_1}{x_1}\frac{\mathrm{d}x_2}{x_2}\frac{\mathrm{d}y}{y}\right).$$

We develop the geometric power series and integrate respect to y, we obtain.

$$= -4\pi^3 \log 2.$$

Then

$$8\pi^3 m(P) = 42\pi\zeta(3) + 4\pi^3 \log 2.$$

Finally,

$$m(P) = \frac{21}{4\pi^2}\zeta(3) + \frac{\log 2}{2}.$$

5.7 A brief introduction to the language and ideas of Beilinson's conjectures

One of the main problems in Number Theory is finding rational (or integral) solutions of polynomial equations with rational coefficients. This problem is hard to solve in general and a reason for that is the failure of the so called local-global principle.

In spite of this failure, there are several theorems and conjectures which predict that one may obtain global information from local information and that that relation is made through values of L-functions. These statements include the Dirichlet class number formula, the Birch – Swinnerton-Dyer conjecture, and more generally, Bloch's and Beilinson's conjectures.

Typically, there are four elements involved in this setting: an arithmetic-geometric object X (typically, an algebraic variety), its L-function (which codify local information), a finitely generated abelian group K, and a regulator map $K \to \mathbb{R}$. When K has rank 1, Beilinson's conjectures predict -among other things- that the $\mathrm{L}'(0)$ is, up to a rational number, equal to a value of the regulator. For instance, for a real quadratic field F, $X = \mathcal{O}_F$ (the ring of integers), $\mathrm{L} = \zeta_F$, and the group is $\mathcal{O}_F^*$, then Dirichlet class number formula may be written as $\zeta_F'(0)$ is equal to, up to a rational number, $\log|\epsilon|$, for some $\epsilon \in \mathcal{O}_F^*$.

In a cohomological language, the regulator may be seen as a map among two different cohomology theories:

$$r_{\mathcal{D}} : H^i_{\mathcal{M}}(X, \mathbb{Q}(j)) \longrightarrow H^i_{\mathcal{D}}(X, \mathbb{R}(j))$$

for smooth quasiprojective varieties X over $\mathbb{R}$ or $\mathbb{C}$. While the first object captures some arithmetic information from X, the second object is more of a geometric

nature. The following particular case illustrates the idea,

$$H^1_{\mathcal{M}}(X, \mathbb{Q}(1)) = \mathcal{O}_X^* \otimes \mathbb{Q} \overset{r_{\mathcal{D}} = \log|\cdot|}{\longrightarrow} \{\varphi \in \mathcal{C}_X^\infty \mid \mathrm{d}\varphi = \mathrm{Re}(w), \text{ for some } w$$

$$\text{with log singularities at infinity}\} \cong H^1_{\mathcal{D}}(X, \mathbb{R}(1)).$$

Our goal in this section is to give a very schematic description of the elements involved in this setting and provide a brief idea of Deninger's work. We will also pave the way towards the construction of polylogarithmic motivic complexes. We will borrow freely from many sources including [19,20,38,41,45]. We refer the reader to those works for further details.

5.7.1 Deligne cohomology

Let X a smooth projective variety over $\mathbb{C}$. For any subring $A \subset \mathbb{C}$, let $A(n) = (2\pi \mathrm{i})^n A \subset \mathbb{C}$. Let Ω_X^p be the sheaf of holomorphic differential forms over the analytic manifold X.

Deligne defines the following complex of sheaves:

$$A(n)_{\mathcal{D}} = \left(A(n) \to \mathcal{O}_X = \Omega_X^0 \to \Omega_X^1 \to \ldots\right).$$

(Here $A(n)$ is in place zero). Then

$$H^i_{\mathcal{D}}(X, A(n)) := H^i(X, A(n)_{\mathcal{D}}).$$

When $A = \mathbb{R}$, it is possible to see (by means of quasi-isomorphisms) that

$$H^i_{\mathcal{D}}(X, \mathbb{R}(n)) = H^i_{\mathcal{D}}(X, \widetilde{\mathbb{R}(n)}_{\mathcal{D}})$$

where

$$\widetilde{\mathbb{R}(n)}_{\mathcal{D}} = \mathrm{Cone}(F^{\geq n}(X) \xrightarrow{\pi_n} \mathcal{A}^{\cdot}(X)(n-1))[-1].$$

In other words, $\widetilde{\mathbb{R}(n)}_{\mathcal{D}}$ is the total complex associated to

$$\begin{array}{ccccccccccc}
(\mathcal{A}^0(X) & \xrightarrow{d} & \mathcal{A}^1(X) & \xrightarrow{d} & \dots & \xrightarrow{d} & \mathcal{A}^n(X) & \xrightarrow{d} & \mathcal{A}^{n+1}(X) & \xrightarrow{d} & \dots) \otimes \mathbb{R}(n-1) \\
 & & & & & & \uparrow \pi_n & & \uparrow \pi_n & & \\
 & & & & & & F^n(X) & \xrightarrow{\partial} & F^{n+1}(X) & \xrightarrow{\partial} & \dots
\end{array}$$

Here $\mathcal{A}^i(X)(j)$ denotes the space of smooth i-forms with values in $(2\pi \mathrm{i})^j\mathbb{R}$, and $F^i(X)$ denotes the space of holomorphic i-forms on X with at most logarithmic singularities at infinity. $\pi_n : \mathbb{C} \to \mathbb{R}(n)$ is the projection $\pi_n(z) = \frac{z+(-1)^n\bar{z}}{2}$.

In particular, for $n = i$, there is a more explicit description of Deligne cohomology:

$$H^i_{\mathcal{D}}(X, \mathbb{R}(i)) = \{\varphi \in \mathcal{A}^{i-1}(X)(i-1) \mid \mathrm{d}\varphi = \pi_{i-1}(\omega), \omega \in F^i(X)\} \,/\, \mathrm{d}\mathcal{A}^{i-2}(X)(i-1).$$

The cup product

$$\cup : H^i_{\mathcal{D}}(X, \mathbb{R}(i)) \times H^j_{\mathcal{D}}(X, \mathbb{R}(j)) \to H^{i+j}_{\mathcal{D}}(X, \mathbb{R}(i+j))$$

can be described explicitly as

$$[\varphi_i] \cup [\varphi_j] = [\varphi_i \wedge \pi_j\omega_j + (-1)^j \pi_i\omega_i \wedge \varphi_j]$$

with the obvious notation. Indeed, it is possible to prove that

$$\mathrm{d}(\varphi_i \cup \varphi_j) = \pi_{i+j-1}(\omega_i \wedge \omega_j).$$

5.7.2 Motivic Cohomology

When S is a scheme, Quillen defines $K_m(S)$, which is equal to $K_m(R)$ for the affine case $S = \mathrm{Spec}(R)$. There is an anticommutative product

$$K_m(S) \times K_{m'}(S) \longrightarrow K_{m+m'}(S).$$

One can associate certain operations to the groups $K_m(S)$, which are called Adams operations,

$$\psi^k : K_m(S) \longrightarrow K_m(S) \quad k \geq 1$$

with properties:

$$\psi^1(x) = x, \quad \psi^k(x+y) = \psi^k(x) + \psi^k(y) \quad \psi^k(xy) = \psi^k(x)\psi^k(y) \quad \psi^k \circ \psi^l = \psi^{kl}.$$

Let

$$K_m^{[n]}(S) := \{x \in K_m(S) \otimes \mathbb{Q} : \psi^k(x) = k^n x, \text{ for all } k \geq 1\}.$$

One has,

$$K_m(S) \otimes \mathbb{Q} = \bigoplus_{n \geq 0} K_m^{[n]}(S).$$

Beilinson defines motivic cohomology as

$$H^i_{\mathcal{M}}(X, \mathbb{Q}(j)) := K^{[j]}_{2j-i}(X).$$

5.7.3 Conjectures

Let X be a smooth projective variety over $\mathbb{Q}$. Fix an algebraic closure $\bar{\mathbb{Q}}$. For each prime p choose a prime $\mathfrak{P}$ of $\bar{\mathbb{Q}}$ above p. Let $D_{\mathfrak{P}}$, $I_{\mathfrak{P}}$ denote the decomposition and inertia subgroups in $Gal(\bar{\mathbb{Q}}/\mathbb{Q})$. We have the Frobenius $\phi_{\mathfrak{P}}$ as a distinguished

element in $D_{\mathfrak{P}}/I_{\mathfrak{P}}$. Consider, for each $l \neq p$,

$$P_p(H^i(X), T) := \det(1 - \phi_{\mathfrak{P}}^{-1} T; H^i(\bar{X}, \mathbb{Q}_l)^{I_{\mathfrak{P}}}).$$

It is conjectured:

- $P_p(H^i(X), T) \in \mathbb{Q}[T]$ for all p, they are independent of l and nonvanishing for $|t| < p^{-1-i/2}$.
- The Euler product

$$\mathrm{L}(H^i(X), s) := \prod_p P_p(H^i(X), p^{-s})$$

  has the following expected properties:

  - It has a meromorphic continuation to the whole plane.
  - There is a function $\Lambda(H^i(X), s) = \mathrm{L}(H^i(X), s)\mathrm{L}_\infty(H^i(X), s)\cdot$ (exponential factor) that satisfies

$$\Lambda(H^i(X), s) = \Lambda(H^i(X), i + 1 - s).$$

    Here

$$\mathrm{L}_\infty(H^i(X), s) = \begin{cases} \prod_{p<q,\, p+q=i} \Gamma_{\mathbb{C}}(s-p)^{h^{pq}} & \text{if } i \text{ odd} \\ \Gamma_{\mathbb{R}}\left(s - \frac{i}{2}\right)^{h^{\frac{i}{2}+}} \Gamma_{\mathbb{R}}\left(s - \frac{i}{2} + 1\right)^{h^{\frac{i}{2}-}} \prod_{p<q,\, p+q=i} \Gamma_{\mathbb{C}}(s-p)^{h^{pq}} & \text{if } i \text{ even} \end{cases}$$

    where

$$\Gamma_{\mathbb{R}}(s) = \pi^{-\frac{s}{2}}\Gamma\left(\frac{s}{2}\right) \qquad \Gamma_{\mathbb{C}}(s) = 2(2\pi)^{-s}\Gamma(s).$$

    Finally,

$$h^{pq} = \dim_{\mathbb{C}} H^{pq} \qquad h^{p\pm} = \dim_{\mathbb{C}} H^{p,\pm(-1)^p}$$

where

$$H^i(X_{\mathbb{C}}, \mathbb{C}) = \bigoplus_{p+q=i,\, p,q\geq 0} H^{pq}$$

is the Hodge decomposition and

$$H^{pp} = H^{p+} \oplus H^{p-}$$

is the decomposition into eigenspaces with respect to complex conjugation.

The special values for the L-functions have the following conjectures

Conjecture 35 *We have the following:*

1. *Assume $n > \frac{i}{2} + 1$. Then*

$$r_{\mathcal{D}} \otimes \mathbb{R} : H^{i+1}_{\mathcal{M}}(X, \mathbb{Q}(n))_{\mathbb{Z}} \otimes \mathbb{R} \longrightarrow H^{i+1}_{\mathcal{D}}(X_{\mathbb{R}}, \mathbb{R}(n))$$

   is an isomorphism.

2.

$$r_{\mathcal{D}}(\det H^{i+1}_{\mathcal{M}}(X, \mathbb{Q}(n))_{\mathbb{Z}}) = \mathrm{L}(H^i(X), n)\mathcal{D}_{i,n}$$

where $\mathcal{D}_{i,n}$ is certain explicit algebraic structure (see [20]).

The order of vanishing results follow from the expected functional equation (see [41]):

$$\mathrm{ord}_{s=i+1-n}\mathrm{L}(H^i(X), s) = \dim H^{i+1}_{\mathcal{D}}(X_{\mathbb{R}}, \mathbb{R}(n)) = \dim H^{i+1}_{\mathcal{M}}(X, \mathbb{Q}(n))_{\mathbb{Z}}$$

It is necessary to consider different versions for the cases $n = \frac{i+1}{2}, \frac{i}{2} + 1$, but we will not explore that direction.

5.7.4 The non-exact case

Here we will follow Deninger [19]. Let X be a variety over $K = \mathbb{R}$ or $\mathbb{C}$. There is a natural pairing,

$$\langle , \rangle : H^n(X/K, \mathbb{R}(n)) \times H_n(X/K, \mathbb{R}(-n)) \longrightarrow \mathbb{R}.$$

For $P \in \mathbb{Z}[x_1, \ldots, x_n]$, let $Z(P) = \{P = 0\} \cap \mathbb{G}^n_{m,K}$. Denote $X_P = \mathbb{G}^n_{m,K} \setminus Z(P)$. Since $F^{n+1}(X_P) = 0$,

$$H^{n+1}_{\mathcal{D}}(X_P/K, \mathbb{R}(n+1)) = H^n(X_P/K, \mathbb{R}(n)).$$

If $P \neq 0$ in $\mathbb{T}^n$, then $[\mathbb{T}^n]$ defines a class in $H^n(X_P, \mathbb{C})$.

If P has real coefficients, the conjugation involution F_∞ sends $[\mathbb{T}^n]$ to $(-1)^n[\mathbb{T}^n]$. Then one can consider $[\mathbb{T}^n] \otimes (2\pi \mathrm{i})^{-n} \in H^n(X_P/K, \mathbb{Z}(n))$.

For $f_0, \ldots, f_n \in \mathcal{O}^*_X$, let $\{f_0, \ldots, f_n\} \in H^{n+1}_{\mathcal{M}}(X, \mathbb{Q}(n+1))$ be the cup product of the functions viewed as elements in $H^1_{\mathcal{M}}(X, \mathbb{Q}(1))$.

Thus, for $P \neq 0$ in $\mathbb{T}^n$, Deninger observes the following:

$$m(P) = \left\langle r_{\mathcal{D}}\{P, x_1, \ldots, x_n\}, [\mathbb{T}^n] \otimes (2\pi \mathrm{i})^{-n} \right\rangle.$$

Let P^* denote the principal coefficient of x_n (then $P^* \in \mathbb{Z}[x_1, \ldots, x_{n-1}]$). Let A be the union of connected components of dimension $n-1$ in $\{P = 0\} \cap \{|x_1| = \ldots = |x_{n-1}| = 1,\ |x_n| \geq 1\}$ (so $A = \gamma$ in the notation from section 5.1 and $A = \Gamma$ in section 5.2). Assume that $A \subset Z^{reg}$. Then $[A] \in H_{n-1}(Z^{reg}, \partial A, \mathbb{Z})$.

Now suppose that $\partial A = \emptyset$. Then $[A] \in H_{n-1}(Z^{reg}, \mathbb{Z}))$.

Under certain assumptions, and by means of Jensen's formula,

$$m(P^*) - m(P) = \left\langle r_{\mathcal{D}}\{x_1, \ldots, x_n\}, [A] \otimes (2\pi \mathrm{i})^{1-n} \right\rangle,$$

where $\{x_1, \ldots, x_n\} \in H^n_{\mathcal{M}}(Z^{reg}, \mathbb{Q}(n))$.

Deninger explains that the requirement that $\partial A = 0$ suffices to eliminate the relative cohomology, but it is not necessary. Sometimes it is possible to avoid the relative cohomology if one can consider involutions in the last variable. Deninger does not go beyond the case when $\dim \partial A = 0$, and thus the number of variables is two.

The problem for $\dim \partial A > 0$ is that it is necessary to give ∂A a structure of an algebraic variety. Maillot has worked in this direction (see the interpretation for $\partial\Gamma$ in section 5.2) and has been able to translate many of the formulas that were found by the author into the language of motivic cohomology.

5.8 The n-variable case

Zagier [51] formulated a conjecture that predicts the value of the $\zeta_F(m)$ of a function field in terms of the m-polylogarithm evaluated in elements of the k-theory of the field, more precisely, these elements lie in what is called Bloch group.

For X an algebraic variety, Goncharov [22, 24, 26], has generalized the polylogarithm complexes to certain polylogarithmic motivic complexes. A regulator can be defined in these complexes whose cohomology is related to the Bloch groups and is conjectured to be the motivic cohomology of X. This regulator is conjectured to coincide with Beilinson's regulator.

Goncharov's conjectures imply, together with Borel's Theorem, Zagier's conjecture.

We will follow Zagier and Gangl [52] and Goncharov, [22,24,26]. We mention definitions and results, the proofs may be found in the mentioned works.

5.8.1 Zagier's conjecture and Bloch groups

Zagier's conjecture [51,52] was originated by the observation of the interrelations between dilogarithms, volumes in the hyperbolic 3-space, and zeta functions of number fields.

As we mentioned before, the volume of a hyperbolic 3-manifold M can be expressed in terms of dilogarithms evaluated in algebraic arguments. More precisely, if z_j, $j = 1, \ldots, k$ are the parameters for a triangulation of M into ideal tetrahedra, equation (4.26) says:

$$\mathrm{Vol}(M) = \sum_{j=1}^{k} D(z_j).$$

From the equations of the triangulation, it is possible to deduce

$$\sum_{j=1}^{k} z_j \wedge (1 - z_j) = 0$$

in $\bigwedge^2 \mathbb{C}^\times$. Hence, given a hyperbolic 3-manifold M, we can associate an element $\xi \in \mathcal{A}(\bar{\mathbb{Q}})$ with

$$\mathcal{A}(F) := \left\{ \sum n_j [z_j] \in \mathbb{Z}[F] \mid \sum n_j z_j \wedge (1 - z_j) = 0 \right\}$$

and $\mathrm{Vol}(M) = D(\xi)$. This element ξ is not unique, it depends on the triangulation. However, the dilogarithm is invariant by the five-term relation, and this is the relation that governs the changes in the triangulations. Hence the value $D(\xi)$ does not change when we change the triangulation.

Then, when we consider ξ as an element in $\mathcal{A}(\bar{\mathbb{Q}})$, we should quotient by the five-term relation. Let

$$\mathcal{C}(F) := \left\{ [x] + [y] + [1 - xy] + \left[\frac{1-x}{1-xy}\right] + \left[\frac{1-y}{1-xy}\right] \,\middle|\, x, y \in F \right\}.$$

Define the Bloch group by

$$\mathcal{B}(F) := \mathcal{A}(F)/\mathcal{C}(F).$$

Hence, we will think of $\xi \in \mathcal{B}(\bar{\mathbb{Q}})$.

Humbert's formula which states that

$$\zeta_F(2) = \frac{4\pi^2}{d\sqrt{d}}\mathrm{Vol}(\mathbb{H}^3/SL_2(\mathcal{O}_F))$$

for $F = \mathbb{Q}(\sqrt{-d})$, inspired the following:

Theorem 36 *Let F be a number field with r_1 real and r_2 complex places. Then the group $\mathcal{B}(F)$ is finitely generated of rank r_2. Let $\xi_1, \ldots, \xi_{r_2}$ be a $\mathbb{Q}$-basis of $\mathcal{B}(F) \otimes \mathbb{Q}$ and $\sigma_1, \ldots, \sigma_{r_2}$ a set of complex embeddings (one for each conjugate pair) of F into $\mathbb{C}$. Then*

$$\zeta_F(2) \sim_{\mathbb{Q}^\times} |D_F|^{\frac{1}{2}}\pi^{2(r_1+r_2)}\det(D(\sigma_i(\xi_j))_{i,j}).$$

The above Theorem was proved by Zagier [48] by combining Borel's Theorem and relation (5.20) between $K_3(F)$ and $\mathcal{B}(F)$ proved by Suslim.

After many experiments, Zagier proposed a generalization of Bloch's groups that should lead to relations between $\zeta_F(m)$ and the m-polylogarithm as a function on $K_{2m-1}(F)$.

$$\mathcal{B}_m(F) := \mathcal{A}_m(F)/\mathcal{R}_m(F)$$

Here $\mathcal{A}_m(F)$ and $\mathcal{R}_m(F)$ are certain subgroups of $\mathbb{Z}[F]$. We will see Goncharov's version of their definition in the next section.

The polylogarithm conjecture is

Conjecture 37 *Let F be a number field. The image of*

$$P_m : \mathcal{A}_m(F) \to \mathbb{R}^{n_\mp}$$

is commensurable with the Borel regulator lattice. In particular, the group $\mathcal{B}_m$ us finitely generated of rank $n_\mp$. Let $\xi_1, \ldots, \xi_{n_\mp}$ be a $\mathbb{Q}$-basis of $\mathcal{B}_m(F) \otimes \mathbb{Q}$ and $\sigma_1, \ldots, \sigma_{n_\mp}$ the elements of the set of embeddings of F into $\mathbb{C}$. Then

$$\zeta_F(m) \sim_{\mathbb{Q}^\times} |D_F|^{\frac{1}{2}} \pi^{mn_\mp} \det(P_m(\sigma_i(\xi_j))_{i,j}).$$

5.8.2 The polylogarithmic motivic complexes

If one wishes to generalize the polylogarithm complexes, it is necessary to construct the analogous of equations $R_i(F)$. Unfortunately, the functional equations of higher polylogarithms are not known explicitly.

Given a field F one defines inductively some subgroups $\mathcal{R}_n(F)$, then let

$$\mathbf{B}_n(F) := \mathbb{Z}[\mathbb{P}^1_F]/\mathcal{R}_n(F). \tag{5.38}$$

Let $\{x\}$ be the class of x in $\mathbb{Z}[\mathbb{P}^1_F]$. Then

$$\mathcal{R}_1(F) := \langle \{x\} + \{y\} - \{xy\}, \quad x, y \in F^*, \{0\}, \{\infty\} \rangle . \tag{5.39}$$

Thus $\mathbf{B}_1(F) = F^*$. Now we proceed to construct a family of morphisms,

$$\mathbb{Z}[\mathbb{P}^1_F] \xrightarrow{\delta_n} \begin{cases} \mathbf{B}_{n-1}(F) \otimes F^* & \text{if } n \geq 3 \\ \bigwedge^2 F^* & \text{if } n = 2 \end{cases}$$

$$\delta_n(\{x\}) = \begin{cases} \{x\}_{n-1} \otimes x & \text{if } n \geq 3 \\ (1-x) \wedge x & \text{if } n = 2 \\ 0 & \text{if } \{x\} = \{0\}, \{1\}, \{\infty\} \end{cases} \tag{5.40}$$

Then one defines

$$\mathcal{A}_n(F) := \ker \delta_n. \tag{5.41}$$

Note that any element $\alpha(t) = \sum n_i\{f_i(t)\} \in \mathbb{Z}[\mathbb{P}^1_{F(t)}]$ has a specialization $\alpha(t_0) = \sum n_i\{f_i(t_0)\} \in \mathbb{Z}[\mathbb{P}^1_F]$, for all $t_0 \in \mathbb{P}^1_F$.

Thus,

$$\mathcal{R}_n(F) := \langle \alpha(0) - \alpha(1), \alpha(t) \in \mathcal{A}_n(F(t)) \rangle . \tag{5.42}$$

Goncharov proves the following results

Theorem 38

- $P_n(\mathcal{R}_n(\mathbb{C})) = 0$
- *Suppose that $f_i(t) \in \mathbb{C}(t)^*$ are such that $\sum_i n_i P_n(f_i(t)) = 0$, then*

$$\sum_i n_i(\{f_i(z)\} - \{f_i(0)\}) \in \mathcal{R}_n(\mathbb{C})$$

so $\mathcal{R}_n(\mathbb{C})$ is the subgroup of all the functional equations for the n-polylogarithm.

Because of $\delta_n(\mathcal{R}_n(F)) = 0$, we obtain some morphisms

$$\delta_n : \mathbf{B}_n(F) \to \mathbf{B}_{n-1}(F) \otimes F^* \quad n \geq 3, \quad \delta_2 : \mathbf{B}_2(F) \to \wedge^2 F^*$$

One obtains the complex:

$$\mathbf{B}_F(n) : \mathbf{B}_n(F) \xrightarrow{\delta} \mathbf{B}_{n-1}(F) \otimes F^* \xrightarrow{\delta} \mathbf{B}_{n-2}(F) \otimes \wedge^2 F^* \xrightarrow{\delta} \ldots \xrightarrow{\delta} \mathbf{B}_2(F) \otimes \wedge^{n-2} F^* \xrightarrow{\delta} \wedge^n F^*$$

where

$$\delta : \{x\}_p \otimes \wedge_{i=1}^{n-p} y_i \to \delta_p(\{x\}_p) \wedge \wedge_{i=1}^{n-p} y_i.$$

The following conjecture relates the cohomology of the complex $\mathbf{B}_F(n)$ to motivic cohomology:

Conjecture 39 *[24]*

$$H^i(\mathbf{B}_F(n) \otimes \mathbb{Q}) \cong K_{2n-i}^{[n-i]}(F) \tag{5.43}$$

or,

$$H^i(\mathbf{B}_F(n) \otimes \mathbb{Q}) \cong K^{\{n\}}_{2n-i}(F) \otimes \mathbb{Q} \tag{5.44}$$

There are canonical homomorphisms

$$B_n(F) \to \mathbf{B}_n(F) \quad [x]_n \to \{x\}_n \qquad n = 1, 2, 3$$

which are isomorphisms for $i = 1, 2$ and expected to be an isomorphism for $i = 3$.

We will now describe the construction of the regulator on the polylogarithmic motivic complexes. Let us establish some notation:

$$\widehat{\mathcal{L}}_k(z) := \begin{cases} \mathcal{L}_k(z) & k > 1 \text{ odd} \\ \mathrm{i}\mathcal{L}_k(z) & k \text{ even} \end{cases}$$

For any integers $p \geq 1$ and $k \geq 0$, define

$$\beta_{k,p} := (-1)^p \frac{(p-1)!}{(k+p+1)!} \sum_{j=0}^{[\frac{p-1}{2}]} \binom{k+p+1}{2j+1} 2^{k+p-2j} B_{k+p-2j}.$$

Definition 40

$$\widehat{\mathcal{L}}_{p,q}(x) := \widehat{\mathcal{L}}_p(x) \log^{q-1} |x| \, \mathrm{d} \log |x| \qquad p \geq 2$$

$$\widehat{\mathcal{L}}_{1,q}(x) := (\log |x| \, \mathrm{d} \log |1-x| - \log |1-x| \, \mathrm{d} \log |x|) \log^{q-1} |x|$$

We will use the following notation

$$\mathrm{Alt}_m F(t_1, \ldots t_m) := \sum_{\sigma \in S_m} (-1)^{|\sigma|} F(x_{\sigma(1)}, \ldots, x_{\sigma(m)}).$$

Now, we are ready to construct the differentials:

Definition 41 *Let x, x_i rational functions on a complex variety X.*

$$\eta_{n+m}(m+1) : \{x\}_n \otimes x_1 \wedge \ldots \wedge x_m \to$$

$$\widehat{\mathcal{L}}_n(x)\mathrm{Alt}_m\left(\sum_{p\geq 0}\frac{1}{(2p+1)!(m-2p)!}\bigwedge_{j=1}^{2p}\mathrm{d}\log|x_j|\wedge\bigwedge_{j=2p+1}^{m}\mathrm{di}\arg x_j\right)$$

$$+\sum_{1\leq k,\,1\leq p\leq m}\beta_{k,p}\widehat{\mathcal{L}}_{n-k,k}(x)\wedge\mathrm{Alt}_m\left(\frac{\log|x_1|}{(p-1)!(m-p)!}\bigwedge_{j=2}^{p}\mathrm{d}\log|x_j|\wedge\bigwedge_{j=p+1}^{m}\mathrm{di}\arg x_j\right) \tag{5.45}$$

$$\eta_m(m) : x_1 \wedge \ldots \wedge x_m \to$$

$$\mathrm{Alt}_m\left(\sum_{p\geq 0}\frac{\log|x_1|}{(2p+1)!(m-2p-1)!}\bigwedge_{j=2}^{2p+1}\mathrm{d}\log|x_j|\wedge\bigwedge_{j=2p+2}^{m}\mathrm{di}\arg x_j\right) \tag{5.46}$$

Let F a field with discrete valuation v, residue field F_v and group of units U. Let $u \to \bar{u}$ the projection $U \to F_v^*$, and π a uniformizer. There is a homomorphism

$$\theta : \bigwedge^n F^* \to \bigwedge^{n-1} F_v^*$$

defined by

$$\theta(\pi \wedge u_1 \wedge \ldots \wedge u_{n-1}) = \bar{u}_1 \wedge \ldots \wedge \bar{u}_{n-1} \qquad \theta(u_1 \wedge \ldots \wedge u_n) = 0.$$

Now define $s_v : \mathbb{Z}[\mathbb{P}^1_F] \to \mathbb{Z}[\mathbb{P}^1_{F_v}]$ by $s_v(\{x\}) = \{\bar{x}\}$. It induces $s_v : \mathbf{B}_m(F) \to \mathbf{B}_m(F_v)$. Now

$$\partial_v := s_v \otimes \theta : \mathbf{B}_m(F) \otimes \bigwedge^{n-m} F^* \to \mathbf{B}_m(F_v) \otimes \bigwedge^{n-m-1} F_v^* \tag{5.47}$$

defines a morphism of complexes

$$\partial_v : \mathbf{B}_F(n) \to \mathbf{B}_{F_v}(n-1)[-1]. \tag{5.48}$$

Observation 42 *The induced morphism*

$$\partial_v : H^n(\mathbf{B}_F(n)) \to H^{n-1}(\mathbf{B}_{F_v}(n-1))$$

coincides with the tame symbol defined by Milnor

$$\partial_v : K_n^M(F) \to K_{n-1}^M(F_v).$$

Let X be a complex variety. Let $X^{(1)}$ denote the set of the codimension one closed irreducible subvarieties. Let d be the de Rham differential on $\mathcal{A}^i(X)$ and let $\mathcal{D}$ be the de Rham differential on distributions. So

$$\mathrm{d}(\,\mathrm{d}\arg x) = 0 \qquad \mathcal{D}(\,\mathrm{d}\arg x) = 2\pi\delta(x)$$

The difference $\mathcal{D} - \mathrm{d}$ is the de Rham residue homomorphism.

Goncharov [24] proves the following,

Theorem 43 *$\eta_n(m)$ induces a homomorphism of complexes*

$$\begin{array}{ccccccc}
\mathbf{B}_n(\mathbb{C}(X)) & \xrightarrow{\delta} & \mathbf{B}_{n-1}(\mathbb{C}(X)) \otimes \mathbb{C}(X)^* & \xrightarrow{\delta} & \dots & \xrightarrow{\delta} & \bigwedge^n \mathbb{C}(X)^* \\
\downarrow \eta_n(1) & & \downarrow \eta_n(2) & & & & \downarrow \eta_n(n) \\
\mathcal{A}^0(X)(n-1) & \xrightarrow{\mathrm{d}} & \mathcal{A}^1(X)(n-1) & \xrightarrow{\mathrm{d}} & \dots & \xrightarrow{\mathrm{d}} & \mathcal{A}^{n-1}(X)(n-1)
\end{array}$$

such that

- $\eta_n(1)(\{x\}_n) = \widehat{\mathcal{L}}_n(x)$.
- $\mathrm{d}\eta_n(n)(x_1 \wedge \ldots \wedge x_n) = \pi_n\left(\frac{\mathrm{d}x_1}{x_1} \wedge \ldots \wedge \frac{\mathrm{d}x_n}{x_n}\right)$.
- $\eta_n(m)(*)$ *defines a distribution on* $X(\mathbb{C})$.
- *The morphism* $\eta_n(m)$ *is compatible with residues:*

$$\mathcal{D} \circ \eta_n(m) - \eta_n(m+1) \circ \delta = 2\pi\mathrm{i} \sum_{Y \in X^{(1)}} \eta_{n-1}(m-1) \circ \partial_{v_Y}, \qquad m < n \quad (5.49)$$

$$\mathcal{D} \circ \eta_n(n) - \pi_n\left(\frac{\mathrm{d}x_1}{x_1} \wedge \ldots \wedge \frac{\mathrm{d}x_n}{x_n}\right) = 2\pi\mathrm{i} \sum_{Y \in X^{(1)}} \eta_{n-1}(n-1) \circ \partial_{v_Y}, \quad (5.50)$$

where v_Y *is the valuation defined by the divisor* Y.

Now we explain the relation of $\eta_n(\cdot)$ to the regulator. Set $\tilde{\eta_n}(i) := \eta_n(i)$ for $i < n$, and

$$\tilde{\eta_n}(n) : \bigwedge^n \mathbb{C}(X)^* \to \mathcal{A}^{n-1}(X)(n-1) \oplus F^n(X)$$

$$x_1 \wedge \ldots \wedge x_n \to \eta_n(n)(x_1 \wedge \ldots \wedge x_n) + \frac{\mathrm{d}x_1}{x_1} \wedge \ldots \wedge \frac{\mathrm{d}x_n}{x_n}.$$

Then one gets a homomorphism of complexes

$$\tilde{\eta_n}(\cdot) : \mathbf{B}_{\mathbb{C}(X)}(n) \to \widetilde{\mathbb{R}(n)}_{\mathcal{D}}.$$

Now the compatibility of $\eta_n(\cdot)$ with residues allows us to define $\tilde{\eta_n}(n)$ on $\mathbf{B}_X(n)$. Finally, for X a variety over $\mathbb{Q}$, one obtains a map between $H^i(\mathbf{B}_X(n))$ and $H^i_{\mathcal{D}}(X, \mathbb{R}(n))$.

Conjecture 44 *The image of*

$$\tilde{\eta_n}(i) : H^i(\mathbf{B}_X(n)) \to H^i_{\mathcal{D}}(X, \mathbb{R}(n))$$

coincides with the image of Beilinson's regulator.

As a final comment, let us remark that Goncharov's conjectures 39 and 44 imply Zagier's conjecture. For a number field, the Adams filtration $K^{[n]}_{2n-i}(F)$ is nontrivial only for $i = 1$. Hence conjecture 44 implies that $\tilde{\mathcal{L}}_n$ as a function on $\mathcal{B}_n(F) = H^1(\mathbf{B}_F(n))$ gives the regulator. But conjecture 39 implies $H^1(\mathbf{B}_F(n) \otimes \mathbb{Q}) = K_{2n-1}(F) \otimes \mathbb{Q}$. Zagier's conjecture is a consequence of combining these observations with Borel's theorem.

5.8.3 The exact case

Let us summarize the relation between the differential forms that we use in our Mahler measure formulas and the corresponding $\eta_n(\cdot)$.

Observation 45

$$\eta_4(4)(x,y,w,z) = \mathrm{i}\,\eta(x,y,w,z) \tag{5.51}$$

$$\eta_4(3)(x,y,z) = \mathrm{i}\,\omega(x,y,z) \tag{5.52}$$

$$\eta_4(2)(x,y) = \mathrm{i}\,\mu(x,y) \tag{5.53}$$

$$\eta_4(1)(x) = \mathrm{i}\mathcal{L}_4(x) \tag{5.54}$$

$$\eta_3(3)(x,y,z) = \eta(x,y,z) \tag{5.55}$$

$$\eta_3(2)(x,y) = \omega(x,y) \tag{5.56}$$

$$\eta_3(1)(x) = \mathcal{L}_3(x) \tag{5.57}$$

$$\eta_2(2)(x,y) = \mathrm{i}\eta(x,y) \tag{5.58}$$

$$\eta_2(1)(x) = \mathrm{i}D(x) \tag{5.59}$$

The usual application of Jensen's formula allows us to write, for $P \in \mathbb{C}[x_1, \ldots, x_n]$,

$$m(P) = m(P^*) - \frac{\delta}{(2\pi)^n} \int_A \eta_n(n)(x_1, \ldots, x_n)$$

where $\delta = -\mathrm{i}$ for n even and 1 of n odd, and A is the same as in Deninger's notation.

It is easy to see that we can then follow a process that is analogous as the ones we did for up to four variables. It remains, of course, to find a good way of describing the successive algebraic varieties that we obtain by taking boundaries.

Ideally, we would expect that this setting explains the nature of the n-variable examples described in section 3.2. So far we have been unable to explicitly integrate the differentials $\eta_n(n-1)$ for those examples (for any n) but we are not completely hopeless in this matter.

Chapter 6

Conclusion

To summarize, we have explored many aspects of the Mahler measure of several-variable polynomials. Specifically, we have deepened the connections between the Mahler measure of Laurent polynomials in several variables, the volumes of hyperbolic manifolds and the special values of L-functions.

We would like to end with a picture that shows the key role of Mahler measure in the relation among the aspects that we discussed. It continues to be our goal to bring more light to the nature of these relationships.

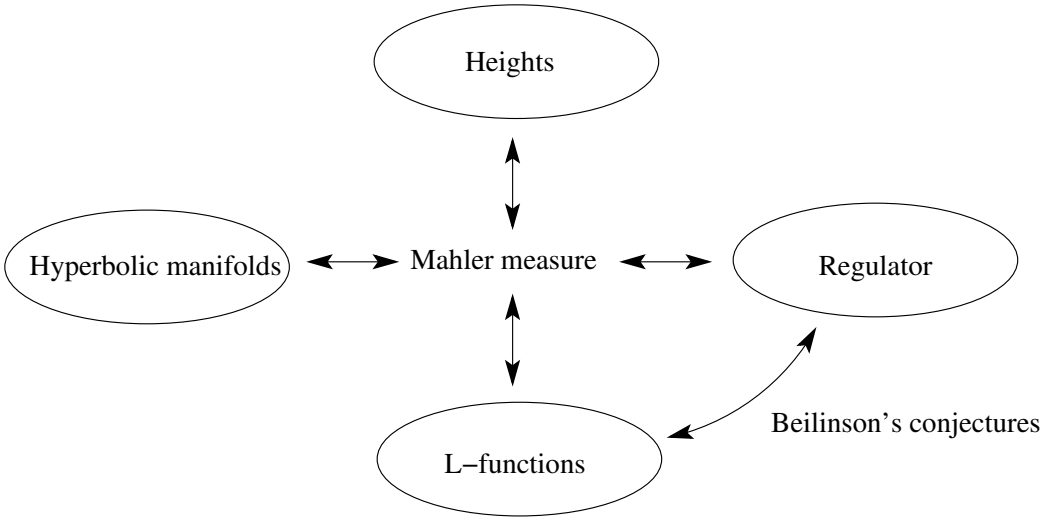

Bibliography

[1] L. V. Ahlfors, Complex Analysis, *International series in pure and applied mathematics.* McGraw-Hill, New York, (1979).

[2] M. J. Bertin, Une mesure de Mahler explicite, *C. R. Acad. Sci. Paris Sér. I. Math.* **333** (2001), 1–3.

[3] M. J. Bertin, Mesure de Mahler d'une famille de polynômes, *J. Reine Angew. Math.* **569** (2004), 175–188.

[4] M. J. Bertin, Mesure de Mahler et regulateur elliptique: preuve de deux relations "exotiques" *Number theory* 1–12, CRM Proc. Lecture Notes, 36, *Amer. Math. Soc.*, Providence, RI, 2004.

[5] M. J. Bertin, Mesure de Mahler d'hypersurfaces K3, (preprint, July 2004).

[6] A. Borel, Cohomologie de SL_n et valeurs de fonctions zeta aux points entiers. *Ann. Scuola Norm. Sup. Pisa Cl. Sci.* (4) 4 (1977), no. 4, 613–636.

[7] D. W. Boyd, Speculations concerning the range of Mahler's measure, *Canad. Math. Bull.* **24** (1981), 453–469.

[8] D. W. Boyd, Mahler's measure and special values of L-functions, *Experiment. Math.* **7** (1998), 37–82.

[9] D. W. Boyd, Mahler's measure and invariants of hyperbolic manifolds, *Number Theory for the Millennium* (M.A. Bennett et al., eds.), A K Peters, Boston (2002) pp. 127–143.

[10] D. W. Boyd, Mahler's measure, hyperbolic manifolds and the dilogarithm, *Canadian Mathematical Society Notes*, 34.2 (2002) pp. 3 – 4 and pp. 26 – 28.

[11] D. W. Boyd, F. Rodriguez-Villegas, Mahler's measure and the dilogarithm (I), *Canad. J. Math.* **54** (2002), 468–492.

[12] D. W. Boyd, F. Rodriguez-Villegas, with an appendix by N. M. Dunfield, Mahler's measure and the dilogarithm (II), (preprint, July 2003).

[13] A. Champanerkar, A-polynomial and Bloch invariants of hyperbolic 3-manifolds, Ph.D. thesis, Columbia University (May 2003)

[14] J. Condon, Calculation of the Mahler measure of a three variable polynomial, (preprint, October 2003).

[15] D. Cooper, M. Culler, H. Gillet, D. D. Long, P. B. Shalen, Plane curves associated to character varieties of 3-manifolds, *Invent. Math.* **118** (1994), no. 1, pp. 47–84.

[16] D. Cooper, D. D. Long, Remarks on the A-polynomial of a knot, *J. Knot Theory Ramifications* **5** (1996), no. 5, pp. 609–628.

[17] D. Cooper, D. D. Long, Representation theory and the A-polynomial of a knot, Knot theory and its applications. *Chaos Solitons Fractals* **9** (1998), no. 4-5, pp. 749–763.

[18] C. D'Andrea, M. N. Lalín, On The Mahler measure of resultants in small dimensions. (In preparation).

[19] C. Deninger, Deligne periods of mixed motives, K-theory and the entropy of certain Z^n-actions, *J. Amer. Math. Soc.* **10** (1997), no. 2, 259–281.

[20] C. Deninger, A. J. Scholl, The Beilinson conjectures, L-*functions and arithmetic (Durham, 1989)*, 173–209, London Math. Soc. Lecture Note Ser., 153, *Cambridge Univ. Press, Cambridge,* 1991.

[21] A. B. Goncharov, The Classical Polylogarithms, Algebraic K-theory and $\zeta_F(n)$, *The Gelfand Mathematical Seminars 1990-1992, Birkhauser*, Boston (1993), 113–135.

[22] A. B. Goncharov, Geometry of Configurations, Polylogarithms, and Motivic Cohomology, *Adv. Math.* **114** (1995), no. 2, 197–318.

[23] A. B. Goncharov, Polylogarithms in arithmetic and geometry, *Proc. ICM-94* Zurich (1995), 374–387.

[24] A. B. Goncharov, Explicit regulator maps on polylogarithmic motivic complexes, (preprint, March 2000).

[25] A. B. Goncharov, Multiple polylogarithms and mixed Tate motives, (preprint, March 2001).

[26] A. B. Goncharov, Regulators, (preprint, July 2004).

[27] R. Kellerhals, On the volumes of hyperbolic 5-orthoschemes and the trilogarithm, *Comment. Math. Helv.* **67** (1992), no. 4, 648–663.

[28] R. Kellerhals, Volumes in hyperbolic 5-space. *Geom. Funct. Anal.* **5** (1995), no. 4, 640–667.

[29] M. N. Lalín, Some examples of Mahler measures as multiple polylogarithms, *J. Number Theory* **103** (2003), no. 1, 85–108.

[30] M. N. Lalín, Mahler Measure and Volumes in Hyperbolic Space, *Geom. Dedicata.* **107** (2004), no. 1, 211–234.

[31] M. N. Lalín, Mahler measure of some n-variable polynomial families, (preprint, September 2004, to appear in *J. Number Theory*)

[32] M. N. Lalín, An algebraic integration for Mahler measure (in preparation).

[33] D. H. Lehmer, Factorization of certain cyclotomic functions. *Ann. of Math. (2)* **34** (1933), no. 3, 461–479.

[34] K. Mahler, On some inequalities for polynomials in several variables, *J. London Math. Soc.* **37** (1962) 341–344.

[35] V. Maillot, Géométrie d'Arakelov des variétés toriques et fibrés en droites intégrables. *Mém. Soc. Math. Fr. (N.S.)* **80** (2000), 129pp.

[36] J. Milnor, Algebraic K-theory and quadratic forms. *Invent. Math.* **9** 1969/1970 318–344.

[37] J. Milnor, Hyperbolic Geometry, The First 150 Years.*Bulletin, AMS* vol. 6, no 1. (1982) 9–24.

[38] J. Nekovář, Beilinson's conjectures. *Motives (Seattle, WA, 1991)*, 537–570, Proc. Sympos. Pure Math., 55, Part 1, *Amer. Math. Soc., Providence, RI,* 1994.

[39] W. D. Neumann, D. Zagier, Volumes of hyperbolic three-manifolds, *Topology* **24** (1985), no. 3, pp. 307–332.

[40] F. Rodriguez-Villegas, Modular Mahler measures I, *Topics in number theory* (University Park, PA 1997), 17–48, Math. Appl., 467, Kluwer Acad. Publ. Dordrecht, 1999.

[41] P. Schneider, Introduction to the Beilinson conjectures. *Beilinson's conjectures on special values of* L*-functions*, 1–35, Perspect. Math., 4, *Academic Press, Boston, MA,* 1988.

[42] C. J. Smyth, On measures of polynomials in several variables, *Bull. Austral. Math. Soc. Ser. A* **23** (1981), 49–63. Corrigendum (with G. Myerson): *Bull. Austral. Math. Soc.* **26** (1982), 317–319.

[43] C. J. Smyth, An explicit formula for the Mahler measure of a family of 3-variable polynomials, *J. Th. Nombres Bordeaux* **14** (2002), 683–700.

[44] C. J. Smyth, Explicit Formulas for the Mahler Measures of Families of Multivariable Polynomials, (preprint, April 2003).

[45] C. Soulé, Régulateurs. Seminar Bourbaki, Vol. 1984/85. *Astérisque* 133-134 (1986), 237–253.

[46] A. A. Suslin, Homology of GL_n, characteristic classes and Milnor K-theory. *Algebraic K-theory, number theory, geometry and analysis (Bielefeld, 1982)*, 357–375, *Lecture Notes in Math.*, 1046, Springer, Berlin, 1984.

[47] S. Vandervelde, A formula for the Mahler measure of $axy + bx + cy + d$, *J. Number Theory* **100** (2003) 184–202.

[48] D. Zagier, Hyperbolic manifolds and special values of Dedekind zeta-functions, *Invent. math.* **83** (1986), pp. 285 – 301.

[49] D. Zagier, The Dilogarithm function in Geometry and Number Theory, *Number Theory and related topics, Tata Inst. Fund. Res. Stud. Math.* **12** Bombay (1988), 231–249.

[50] D. Zagier, The Bloch-Wigner-Ramakrishnan polylogarithm function. *Math. Ann.* **286** (1990), no. 1–3, 613–624.

[51] D. Zagier, Polylogarithms, Dedekind Zeta functions, and the Algebraic K-theory of Fields, *Arithmetic algebraic geometry* (Texel, 1989), 391–430, Progr. Math., 89, Birkhuser Boston, Boston, MA, 1991.

[52] D. Zagier, H. Gangl, Classical and elliptic polylogarithms and special values of L-series, *The arithmetic and geometry of algebraic cycles* (Banff, AB, 1998), 561 - 615, NATO Sci. Ser. C Math. Phys. Sci., 548, Kluwer Acad. Publ., Dordrecht, 2000.

Vita

Matilde Noemí Lalín was born in the city of Buenos Aires, Argentina on April 23, 1977, the daugther of Lidia Roisman and Alberto Lalín. She graduated from Escuela Técnica ORT with a degree of Técnica en Química in December 1995. She then enrolled at the Universidad de Buenos Aires, receiving her degree of Licenciada en Ciencias Matemáticas in 1999. She held a Teaching Assistantship position at the Universidad de Buenos Aires from March 1998 to June 2000 and she was trainer for the Mathematical Olympiad team of Ecuela Técnica ORT from March 1996 to June 2000. She pursued graduate studies at Princeton University from August 2000 to May 2001. She then enrolled at the Graduate School of the University of Texas at Austin where she was granted a Harrington Fellowship and where she has also held Graduate Assistant and Teaching Assistant positions. She has published three research articles.

Permanent Address: 610 west 30th. st. apt. 120
Austin, TX 78705

This dissertation was typeset with LaTeX 2_ε[1] by the author.

[1] LaTeX 2_ε is an extension of LaTeX. LaTeX is a collection of macros for TeX. TeX is a trademark of the American Mathematical Society. The macros used in formatting this dissertation were written by Dinesh Das, Department of Computer Sciences, The University of Texas at Austin, and extended by Bert Kay, James A. Bednar, and Ayman El-Khashab.